ANESI®

A BECKETT COMMERCIAL SOLUTIONS COMPANY

Installation and Operation Manual

Gas-Fired Air to Water Absorption Heat Pump

Natural Gas or Propane Fired

Model: 0402HAN***
37,000 Btu/hr (10.8 kW) Nominal Output
27,400 Btu/hr (8.0 kW) Nominal Input
3.4:1 Modulation

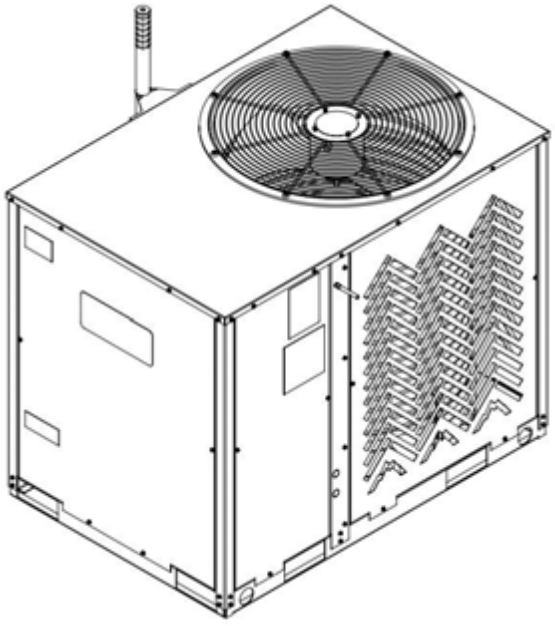

Foreword

This manual is the installation and user's guide for the ANESI model 0402HAN*** Gas-Fired Absorption Heat Pump for Natural Gas or Propane. This manual specifically applies to the installation of the outdoor equipment, and should be used as a guide by HVAC, plumbing and electrical installers to ensure proper installation.

For your safety, read and follow all information within the manual before operation of the unit.

Installation and service must be performed by a qualified installer or service agency, and must comply with all local Installation Codes and Standards, including:

Gas/Fuel Line/Piping:
National Fuel Gas Code, ANSI Z223.1, the Natural Gas Installation Code, the Propane Installation Code and Canadian Gas Association Standard CAN1 B149.1, as applicable

Air for Combustion & Ventilation
Section 5.3 – Air for Combustion and Ventilation – of the National Fuel Gas Code, ANSI Z223.1, appropriate Sections of the Natural Gas Installation Code, CAN/CGA-B149.1, or the Propane Installation Code, CAN/CGA-B149.2, as applicable

Electrical Power/Wiring:
National Electrical Code, ANSI/NFPA No. 70 or CSA Standard C22.1, as applicable

⚠ WARNING

If the information in this manual is not followed exactly, a fire or explosion may result causing property damage or personal injury.

— Do not store or use gasoline or other flammable vapors and liquids in the vicinity of this or any other appliance.

— WHAT TO DO IF YOU SMELL GAS

- **Do not try to light any appliance.**
- **Shut off gas supply at the gas source.**
- **DO NOT touch any electrical switch or use any phone or radio.**
- **Immediately call your gas supplier from a neighbor's phone. Follow the gas supplier's instructions.**
- **If you cannot reach your gas supplier, call the fire department.**
- **DO NOT turn on gas supply until gas leak(s) has been repaired.**

— Installation and service must be performed by a qualified installer, service agency or the gas supplier.

Table of Contents

Section 1 Overview and Technical Specifications 3
Section 1.1 Safety Symbols 3
Section 1.2 Warnings 3
Section 1.3 Overall Description of the GAHP 5
Section 1.4 Operation of the GAHP 5
Section 1.5 Technical Data 7
Section 1.6 GAHP Dimensions 8
Section 2 Installation 9
Section 2.1 General Information 9
Section 2.2 Positioning of the GAHP 10
Section 2.3 Hydronic Plumbing / Connections 11
Section 2.4 Gas Connection 12
Section 2.5 Electrical Connection 13
Section 2.6 Flue Gas Exhaust System Installation 16
Section 2.7 Condensate Disposal 18
Section 2.8 Applications 20
Section 2.8.1 Residential Forced-Air with ANESI AHU 20
Section 2.8.2 Commercial with Indirect Storage Tank 20
Section 2.8.3 Residential Hydronic Space and Water Heating 22
Section 2.8.4 Domestic Hot Water (Double-Wall Requirement) 22
Section 2.9 Hydronic System Filling 22
Section 2.9.1 Hydronic Flow Adjustment 23
Section 2.10 Gas Valve Adjustment & Conversion to Propane 24
Section 2.10.1 Propane Conversion 24
Section 2.10.2 Gas Valve Adjustment 25
Section 2.10.3 Adjustment for High Altitude 26
Section 2.11 Installation Checklist & Regular Inspection 26
Section 3 Operation 26
Section 3.1 Procedure for Start-up 27
Section 3.2 Procedure for Shutdown 27
Section 3.3 Defrost Operation 27
Section 4 Monitoring and Safety 27
Section 4.1 Unit in Modulation 27
Section 4.2 Monitoring 28
Section 4.3 Safety Switches 28
Section 4.4 Refrigerant Pressure Relief Valve 28
Section 5 Maintenance 29
Section 5.1 Combustion System Maintenance 29
Section 5.1.1 Combustion Air Inlet Box and Louvers. 29
Section 5.1.2 Combustion System 29
Section 5.1.3 Cleaning Flue Passages and Burner 30
Section 5.2 Evaporator Coil Cleaning 30
Section 5.3 Cleaning the Condensate Drain Line 30
Section 5.4 Lubrication 31
Section 5.5 Levelness Check 31
Section 5.6 Resetting the System 31
Section 5.7 Ammonia-Water Sealed System 31
Section 6 Replacement Parts 31
Appendix A Control Box Wiring, DIP Switches, & Fuses 32
Appendix B Warnings and Errors 37
Appendix C Electrical Diagram 42
Appendix D Hydronic Equivalent Resistant Calculation 43
Appendix E Installation Checklist 45
Appendix F ANESI App Guidance 48
Appendix G Indoor Heat Exchanger Specifications (Commercial Applications) 50
Appendix H GAHP Center of Gravity 51

Section 1 Overview and Technical Specifications

This section provides an overview of the Gas-Fired Absorption Heat Pump (GAHP) for use with Natural Gas or Propane.

Section 1.1 Safety Symbols

This manual contains the following important safety symbols. Always read and obey all safety instructions.

DANGER

Indicates an imminently hazardous situation which, if not avoided, will result in serious injury or death.

WARNING

Indicates a potentially hazardous situation which, if not avoided, could result in serious injury or death.

CAUTION

Indicates a potentially hazardous situation which, if not avoided, could result in minor or moderate injury or property damage.

Section 1.2 Warnings

WARNING

This product can expose you to chemicals including lead and lead compounds which are known to the State of California to cause cancer and birth defects or other reproductive harm. For more information, go to www.P65Warnings.ca.gov.

CAUTION

Do not connect the GAHP directly to the domestic potable water system. A heat exchanger must be used for domestic hot water heating.

IMPORTANT: STOP, read, and follow all information provided before operation of the appliance. The appliance must be used only for the purpose it was designed for and the manufacturer cannot be held responsible for anything that happens when it is used otherwise.

IMPORTANT: The GAHP was shipped with the internal hydronic plumbing filled with 35-40% inhibited propylene glycol-water solution. Isolation ball valves are located underneath the evaporator coil, just behind the hydronic inlet/outlet NPT connections.

The isolation ball valves SHOULD NOT be opened until the hydronic system piping is complete and ready to charge with inhibited propylene glycol water solution (35-40% recommended, but required concentration will vary based on location). Opening the isolation valves and allowing glycol solution to drain out of the GAHP will expose the heat exchangers to ambient air and cause internal corrosion.

WARNING

Do **NOT** use automotive antifreeze in this equipment.

CAUTION

The stainless-steel flue pipe can reach temperatures up to 150°F (65.5°C) during operation. Proceed with caution when working near it.

WARNING

The GAHP is charged with ammonia-water and has a resting pressure above atmospheric at most ambient temperatures. Safety equipment and proper PPE should be used when interacting with the absorption heat pump section of the outdoor unit. At minimum, PPE should include rubber gloves and safety glasses.

CAUTION

Before drilling or driving any screws into the cabinet, check to be sure the screw will not hit any internal parts or refrigerant lines.

WARNING

Should overheating of the conditioned space occur, or the gas supply fail to shut off, shut off the manual gas valve to the appliance before shutting off the electrical supply.

WARNING

Do not use this appliance if any part has been under water. Immediately call a qualified service technician to inspect the appliance and to replace any part of the control system and any gas control which has been under water.

CAUTION

The appliance and its individual shutoff valve must be disconnected from the gas supply piping system during any pressure testing of that system at test pressures in excess of 1/2 psi (3.5 kPa). The appliance must be isolated from the gas supply piping system by closing its individual manual shutoff valve during any pressure testing of the gas supply piping system at test pressures equal to or less than 1/2 psi (3.5 kPa).

Section 1.3 Overall Description of the GAHP

The GAHP is a self-contained system consisting of:

- An ammonia-water absorption sealed system
- Solution pump and drive motor
- Modulating combustion system
- Variable speed evaporator fan-motor assembly
- Dedicated system controller
- Safety devices

The GAHP is driven primarily by thermal energy delivered by the gas burner. The nominal heating output capacity is 37,000 Btu/hr (11 kW) at 47 °F (8.3 °C) ambient and 114 °F (46 °C) hydronic supply (hydronic outlet from the heat pump) temperature. Control of the GAHP consists of four printed circuit boards and associated power supplies. The GAHP operates on 115 VAC single-phase power connected to a 15-amp circuit.

Section 1.4 Operation of the GAHP

The absorption thermodynamic cycle of the GAHP uses thermal energy provided by the combustion of natural gas or propane to drive the circulation of refrigerant within the sealed system. Electric power is required to drive the fan and pump motors, valves, and controls. Within the sealed system, there are only three moving parts: the refrigerant electronic expansion valve (EEV), the hot gas bypass defrost solenoid valve, and the solution pump. The GAHP is installed outdoors, so combustion products are vented directly to the ambient air through the supplied exhaust venting.

Operating Modes

The GAHP is designed to operate in 4 modes: space heating only, water heating only, combination space and water heating (combi), and pool heating. The controls within the GAHP determine the operating points (hydronic supply temperature and firing rate) depending on the mode of operation.

Residential Applications:

In WATER HEAT only mode, the heat pump will operate automatically to maintain the target water heating hydronic supply temperature and will continue to operate until the WATER HEAT signal is removed. The firing rate will modulate to maintain a target hydronic supply temperature.

In SPACE HEAT only mode, the system will run automatically between 29% and 100% firing rate. An ambient reset curve is used to determine the target supply water temperature for a given outdoor ambient temperature. The control system will modulate combustion to maintain the desired supply water temperature.

In COMBI mode, the system will provide more heat so the indoor systems can quickly satisfy the water tank and the indoor thermostat.

Other Applications (Commercial Water Heating, Hydronic Zoned Systems, Pool, Ice Melt):

These modes are similar to what is listed above but different ambient reset curves and limitations to the firing rate are introduced. If installing a unit in any of these other modes, the DIP switch on the GAHP-OD control board must be adjusted. Refer to Figure A8 of Appendix A for reference to DIP assignments.

Controls and Safety Devices

The GAHP is controlled and monitored by the GAHP-OD control board that communicates with the combustion safety control board. The control boards and devices listed below make up the control, monitoring, and safety devices.

Monitoring

- Hydronic supply temperature (thermistor)
- Hydronic return temperature (flow meter)
- Desorber Thermowell temperature (RTD)
- Evaporator refrigerant inlet temperature (thermistor)
- Evaporator refrigerant outlet temperature (thermistor)
- Ambient (outdoor) temperature (thermistor)

- Refrigerant high-side pressure (transducer)
- Solution pump speed (hall sensor)
- Hydronic flow rate (flow meter)

Safety Devices

- Refrigerant high temperature limit switch
- Refrigerant high pressure switch
- Refrigerant high pressure relief valve
- Combustion air proving switch
- Double shutter electric gas valve

GAHP Control Box

A – GAHP-OD Control Board (x2 LEDs for error/status reporting, detailed in Appendix B)
B – Relay Board
C – Combustion Safety Control Board (x2 LEDs for error reporting, detailed in Appendix B)
D – Grounding Lug
E – Terminal block
F – 24 VAC transformers (75 VA and 20 VA)

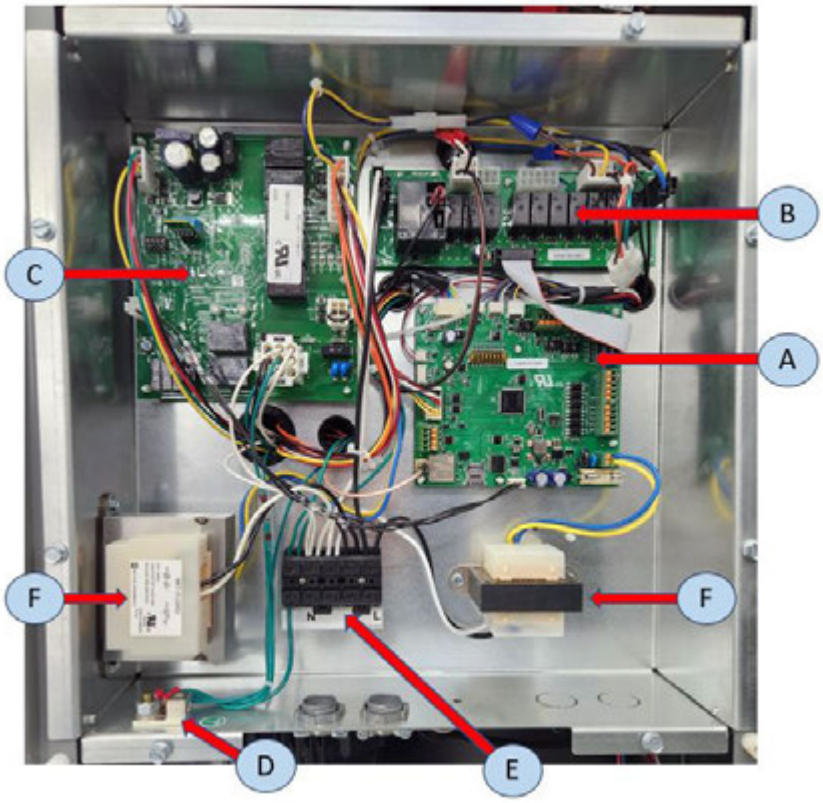

Figure 1: Control Box Layout

Spark Ignitor Board

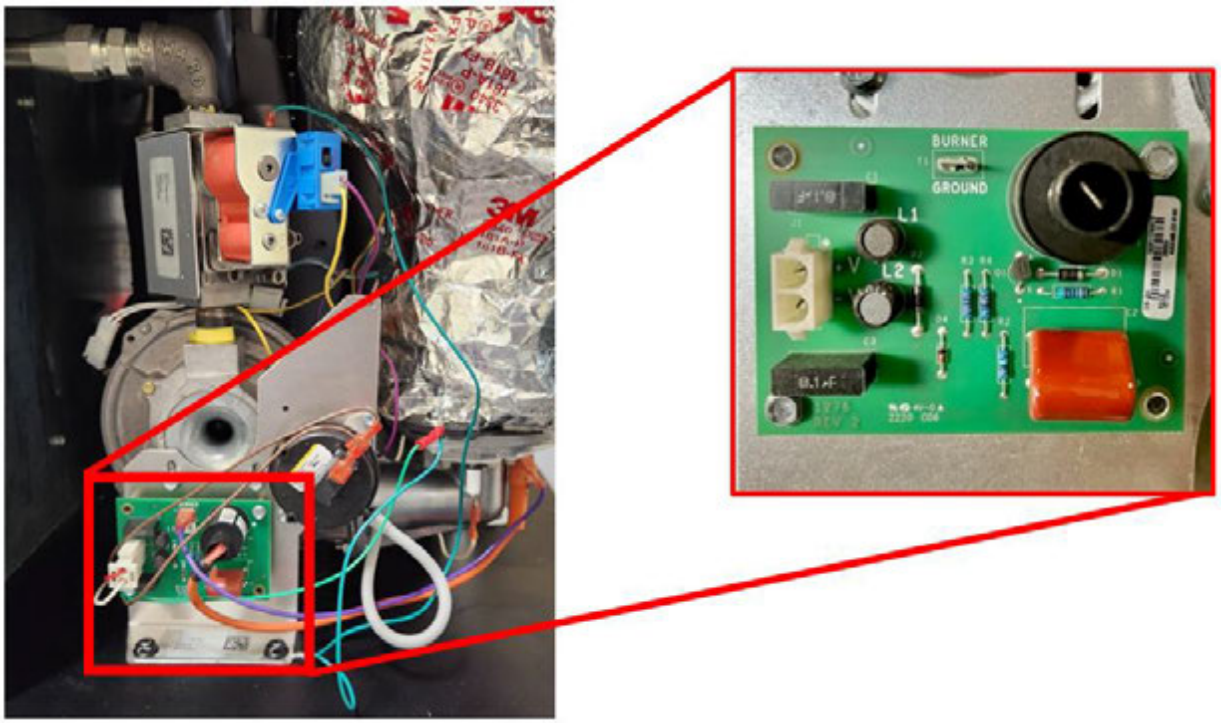

Figure 2: Spark Ignitor Board Location

Section 1.5 Technical Data

PERFORMANCE RATINGS			
Nominal Heating Capacity @ Rating Conditions		37,000 Btu/hr	11 kW
COP @ Rating Conditions		1.35	
Rating Conditions: 47 °F (8.3 °C) ambient, 114 °F (46 °C) Hydronic Supply			
OPERATIONAL LIMITS			
External Ambient Operating Temperature (dry bulb)	MAX	130 °F	54 °C
	MIN	-40 °F	-40 °C
Hydronic Flow	MAX	5 gpm	19 lpm
	MIN	3.5 gpm	13 lpm
Hydronic Pressure Drop (@ 4.3 gpm, 16 Lpm)		4.7	feet H2O
		2	psi
		14	kPa
Inlet (Return to the unit) Water Temperature			
	MAX at 100% Fire	132 °F	55 °C
	MAX at 29% Fire	142 °F	61 °C
Outlet (Supply from Unit) Water Temperature			
	MAX at 100% Fire	150 °F	65 °C
	MAX at 29% Fire	145 °F	63 °C

BURNER SPECIFICATIONS		
Nominal Gas Input (based on HHV)	27,400 Btu/hr	8 kW
Gas Input Modulation	3.4:1	
Emissions	<14 ng NOx/J	
ELECTRICAL RATINGS		
Rated Voltage, 60 Hz, Single Phase	115 VAC	
Max Current (Heat Pump Only)	4 Amps	
PHYSICAL DATA		
Unit Weight	460 lb	209 kg
Hydronic Connections (Inlet/Outlet)	3/4" FNPT	
Gas Inlet Connection	1/2" FNPT	

Section 1.6 GAHP Dimensions

All dimensions shown in inches [millimeters].

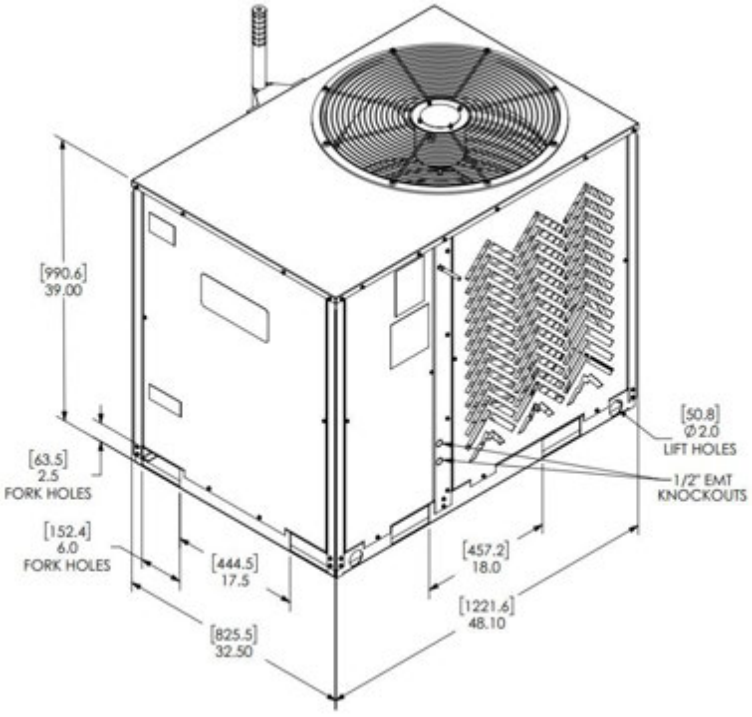

Figure 3: Overall GAHP Dimensions

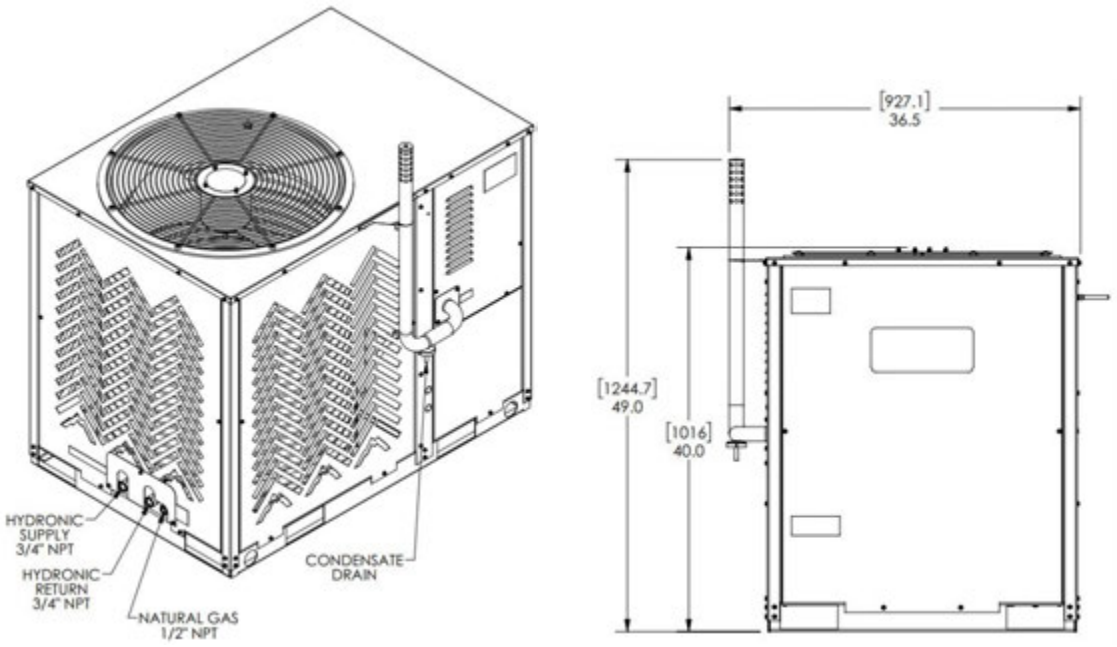

Figure 4: GAHP Connections & Vent Dimensions

Section 2 Installation

This section covers the installation of the GAHP including hydronic plumbing, gas connection, electrical connection, and condensate management.

It should be noted that the GAHP should be installed with appropriately sized indoor components and compatible controls. Mating the GAHP with improperly sized indoor equipment could result in decreased performance, limitations on maximum output, and potential control faults. Contact Anesi technical support for guidance.

Besides common hand tools, and plumbing / wiring supplies, the following tools are needed for installation and commissioning:

1. Propylene Glycol Tester
2. Flue Gas Analyzer
3. Mobile Phone, Laptop, or Tablet (Windows) to connect to the control board.

Section 2.1 General Information

IMPORTANT: The GAHP was shipped with the internal hydronic plumbing filled with 35-40% inhibited propylene glycol-water solution. Isolation ball valves are located underneath the evaporator coil, just behind the hydronic inlet/outlet NPT connections.

The isolation ball valves SHOULD NOT be opened until the hydronic system piping is complete, has been checked for leaks, cleaned, and ready to charge with inhibited propylene glycol water solution (35-40% recommended, but required concentration will vary based on location). Opening the isolation valves and allowing PG-water solution to drain out of the GAHP will expose the internal heat exchangers to ambient air and cause internal corrosion.

There are several small parts shipped loose and required for installation, these include but are not limited to:

1. The bracket for the flue vent
2. The flue vent clip
3. The cellular antenna

These parts may be found inside the packet with the installation manual found inside the cabinet of the GAHP.

Section 2.2 Positioning of the GAHP

The GAHP can be installed at ground level, on a terrace, or on a roof. For installations overhead proper rigging guidelines should be followed. The heat pump is equipped with lifting holes and forklift slots for lifting purposes. The GAHP is for outdoor installation only. It can be installed directly on combustible (wood) flooring. Keep in mind that the appliance base includes drain holes under the evaporator coil to allow rainwater and condensation to flow out the bottom. Ensure there is an adequate means for this water to reach the ground or a suitable drainage system.

Do NOT install the unit near fresh air intakes or areas where there is air discharge such as a dryer vent. Refer to local regulations & bylaws concerning distances from windows and doors with regards to the equipment's flue exhaust. It is recommended to install the unit where sound will not be an issue, for example away from bedrooms.

Installation Base - Always install the GAHP on a flat and level surface that is able to sustain the weight of the GAHP. If installed on the ground, use of an equipment pad is recommended. Alternatively, use of pavers at the four corners to ensure the unit is level is acceptable. Check local codes for specific requirements. The GAHP should be level within +/- 2 degrees in all directions, or with a height difference of no more than 1 inch (25 mm) between any of the four sides measured with a level.

Clearances – Position the GAHP so that minimum clearances from construction, walls, and other equipment are maintained. Minimum clearances are shown in Figure 5 below (dimensions in inches). These clearances are to provide air to the appliance for combustion and ventilation as well as allow access for any service or maintenance, therein it is important to not obstruct this area for the appliance's proper and safe operation. Local jurisdictions might require minimum distances from windows and doors different than what is outlined here. It is the responsibility of the installer to investigate and follow all local codes and regulations during the installation.

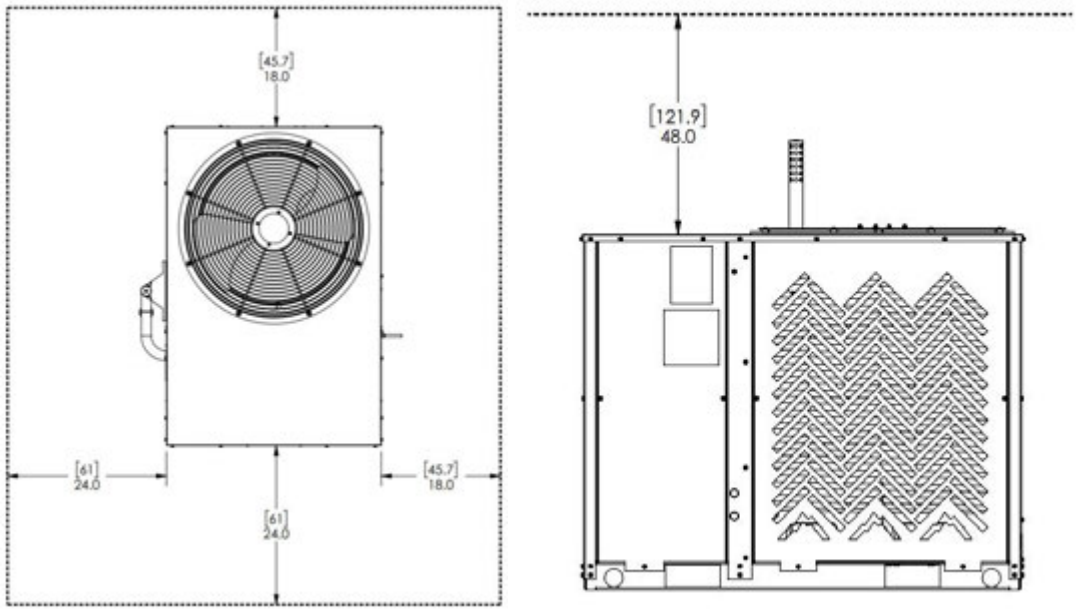

Figure 5: Minimum Clearances around unit

Positioning relative to Building – GAHP should be positioned to limit the length of hydronic lines outdoors. Figure 6 presents two recommended installation orientations for the GAHP.

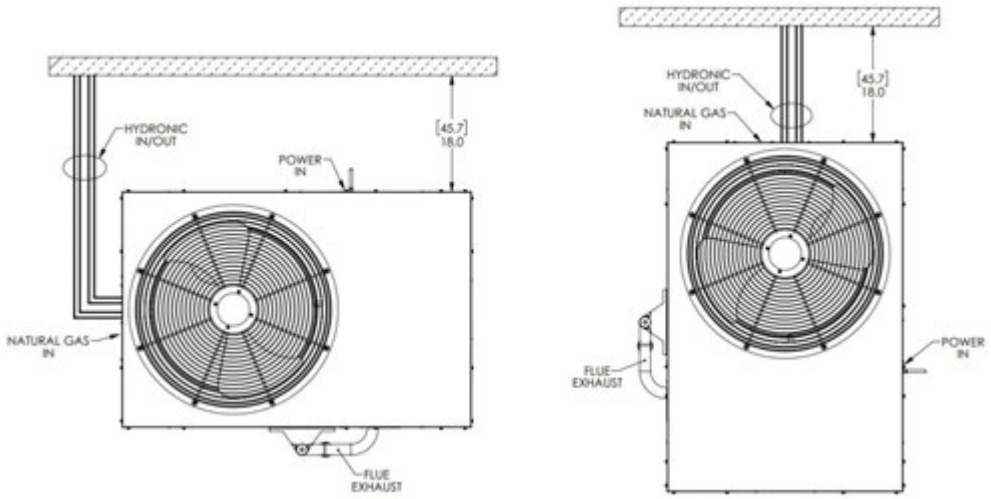

Figure 6: Recommended Installation Orientations

Clearances for Snow Height – Snow accumulation above the Evaporator coil will result in reduced performance. However, the system will continue to operate until the snow height exceeds the combustion air inlet. If the snow level is expected to rise above 30" the unit should be raised.

- Bottom of Evaporator coil to Ground = 10" (25 cm)
- Bottom of Combustion Air Inlet to Ground = 25" (64 cm)

CAUTION

The installer should be cognizant of the unit's location regarding the roof drip line to avoid damage from falling ice / snow, as well as windows & doors.

Installation on a Rooftop – The GAHP may be installed on a roof (if compatible with the GAHP's dimensions and weight). Lifting / fork holes are shown in Figure 3 and center of gravity dimensions are shown in Appendix H, Figure H1. The installer must follow proper rigging guidelines if lifting the GAHP overhead. **The manufacturer cannot be held responsible for any damage arising during installation of the equipment.**

Section 2.3 Hydronic Plumbing / Connections

The hydronic Supply (out) and Return (in) connections located in the rear of the GAHP (near the evaporator fan) are 3/4 inch Female NPT. Use PTFE thread seal tape on the male threads of the adapters installed here.

CAUTION

The included valves are crimped to the internal plumbing in the GAHP; therefore, a back-up wrench MUST be used when connecting hydronic lines to prevent risk of damage.

The hydronic side of the GAHP is pre-charged with 35-40% Inhibited Propylene Glycol-Water mixture for shipment. When charging the hydronic system, the 2 ball valves at the connection points to the appliance must be opened. **DO NOT** open ball valves until the hydronic system installation is complete and ready to fill with PG-Water solution.

A pressure relief valve set at 60 psig (413 kPa) is installed on the hydronic supply manifold inside the GAHP. An automatic air vent is also provided on the hydronic supply manifold at its highest point.

Hydronic lines must be well insulated to prevent energy loss to the ambient air. Hydronic lines located outside should be insulated to an R-value of at least 8.0 (most 2-inch-thick (50.8 mm) foam pipe insulation), and indoor lines should be insulated to an R-value of at least 4.0 (most 1-inch-thick (25.4 mm) foam pipe insulation). Insulation used for outdoor lines must be suitable for outdoor use, UV exposure, and sealed against moisture.

Three quarters (3/4) inch diameter PEX or copper are acceptable materials for the hydronic system. If PEX is used, it is required to be an oxygen-barrier type to prevent long-term issues with corrosion buildup in the heat exchangers of the GAHP. If copper is used, it is advised to install a short section of flexible line next to the heat pump to allow for settling.

Section 2.4 Gas Connection

The gas valve connection is ½ inch Female NPT, located at the rear of the heat pump, to the right of the hydronic connections. The gas line to the GAHP should be sized to ensure the gas pressure entering the GAHP is at least 3.5" WC at a gas flow rate of 27,400 Btu/hr {approximately 27 cuft/hr (0.75 m^3/hr)}. Refer to Figures 7 & 8 below for guidelines on sizing the gas piping to achieve adequate capacity.

Natural Gas
Inlet Pressure: Less than 2 psi
Pressure Drop: 0.5 in w.c.
Specific Gravity: 0.60

Natural Gas flow is given in thousands of BTU/hour. One cubic foot of NG gas = 1000 BTU's. Pipe length must include additional length for all fittings. Add approximately 5 feet of pipe per fitting. Natural Gas Example: A burner that requires 374,000 BTU would need a 1" pipe for a 30' long run.

SCHEDULE 40 METALLIC PIPE

	PIPE SIZE (inches)								
Nominal	½"	¾"	1"	1 ¼"	1 ½"	2"	2 ½"	3"	4"
Actual ID	0.622	0.824	1.049	1.380	1.610	2.067	2.469	3.068	4.026
Length (ft)	Capacity in Cubic Feet of Gas per Hour								
10	172	360	678	1,390	2,090	4,020	6,400	11,300	23,100
20	118	247	466	957	1,430	2,760	4,400	7,780	15,900
30	95	199	374	768	1,150	2,220	3,530	6,250	12,700
40	81	170	320	657	985	1,900	3,020	5,350	10,900
50	72	151	284	583	873	1,680	2,680	4,740	9,660
60	65	137	257	528	791	1,520	2,430	4,290	8,760
70	60	126	237	486	728	1,400	2,230	3,950	8,050
80	56	117	220	452	677	1,300	2,080	3,670	7,490
90	52	110	207	424	635	1,220	1,950	3,450	7,030
100	50	104	195	400	600	1,160	1,840	3,260	6,640
125	44	92	173	355	532	1,020	1,630	2,890	5,890
150	40	83	157	322	482	928	1,480	2,610	5,330
175	37	77	144	296	443	854	1,360	2,410	4,910
200	34	71	134	275	412	794	1,270	2,240	4,560
250	30	63	119	244	366	704	1,120	1,980	4,050
300	27	57	108	221	331	638	1,020	1,800	3,670
350	25	53	99	203	305	587	935	1,650	3,370
400	23	49	92	189	283	546	870	1,540	3,140

Figure 7: Natural Gas – Pipe Size & BTU Supply Chart

Liquid Propane
Inlet Pressure: 11.0 in w.c.
Pressure Drop: 0.5 in w.c.
Specific Gravity: 1.50

Liquid Propane gas flow is given in thousands of BTU/hour. One cubic foot of LP gas = 2516 BTU's. **This chart refers to low pressure Liquid Propane, after regulation.** Pipe length must include additional length for all fittings. Add approximately 5 feet of pipe per fitting. Liquid Propane Example: A burner that requires 787,000 BTU would need a 1" pipe for a 20' long run.

SCHEDULE 40 METALLIC PIPE

	PIPE SIZE (inches)								
Nominal	½"	¾"	1"	1 ¼"	1 ½"	2"	2 ½"	3"	4"
Actual ID	0.622	0.824	1.049	1.380	1.610	2.067	2.469	3.068	4.026
Length (ft)	Capacity in Cubic Feet of Gas per Hour								
10	291	608	1,150	2,350	3,520	6,790	10,800	19,100	39,000
20	200	418	787	1,620	2,420	4,660	7,430	13,100	26,800
30	160	336	632	1,300	1,940	3,750	5,970	10,600	21,500
40	137	287	541	1,110	1,660	3,210	5,110	9,030	18,400
50	122	255	480	985	1,480	2,840	4,530	8,000	16,300
60	110	231	434	892	1,340	2,570	4,100	7,250	14,800
80	101	212	400	821	1,230	2,370	3,770	6,670	13,600
100	94	197	372	763	1,140	2,200	3,510	6,210	12,700
125	89	185	349	716	1,070	2,070	3,290	5,820	11,900
150	84	175	330	677	1,010	1,950	3,110	5,500	11,200
175	74	155	292	600	899	1,730	2,760	4,880	9,950
200	67	140	265	543	814	1,570	2,500	4,420	9,010
250	62	129	243	500	749	1,440	2,300	4,060	8,290
300	58	120	227	465	697	1,340	2,140	3,780	7,710
350	51	107	201	412	618	1,190	1,900	3,350	6,840
400	46	97	182	373	560	1,080	1,720	3,040	6,190

Figure 8: Propane – Pipe Size & BTU Supply Chart

A manual shutoff valve must also be installed in the gas line outside of the appliance and before the drip leg in a readily accessible location for turning on or shutting off the gas to the appliance. The valve installed must comply with the applicable construction standards and local codes.

The contractor must install a drip leg (between the unit and the manual gas valve) at the bottom of the gas line to the unit at a readily accessible location to permit cleaning and emptying. It shall be connected to the piping it serves through the bottom opening of a tee, the other two openings of which shall serve as continuity for the piping system. The depth of the pocket shall be either 3 inches (76 mm) or equal to the internal diameter of the piping it serves, whichever is greater. The diameter of the leg shall be equal to the diameter of the piping it serves. If local codes specify a different arrangement, those shall be followed.

⚠ CAUTION

The appliance and its individual shutoff valve must be disconnected from the gas supply piping system during any pressure testing of that system at test pressures in excess of 1/2 psi (3.5 kPa). The appliance must be isolated from the gas supply piping system by closing its individual manual shutoff valve during any pressure testing of the gas supply piping system at test pressures equal to or less than 1/2 psi (3.5 kPa).

Measure the gas supply pressure before opening the manual valve to the GAHP. The supply pressure needs to be between 3.5 to 13 inH2O (0.87 to 3.23 kPa). If the supply pressure is too high, install a gas pressure regulator.

Section 2.5 Electrical Connection

Line Voltage Wiring

The GAHP requires 115 VAC single phase power and a 15 Amp circuit. From the building's breaker box, power lines should be run through an electrical disconnect mounted within close proximity of the outdoor appliance.

The right-side and left-side posts on the unit (when facing the front cabinet door) have knockouts to allow for running of electrical power and control wires. The power lines should be wired through a knockout hole on the unit with appropriate weather-tight

connections and then run into the main control box. The GAHP's internal control box has 1/2 inch knockouts on the bottom of the box. Knockout wire clamps shall be used here to provide strain relief for wires entering the box.

IMPORTANT! BE SURE TO ROUTE ALL WIRING AWAY FROM THE SOLUTION PUMP MOTOR FLYWHEEL AND THE BURNER AREA.

The Neutral line shall be wired to the labeled N terminal block. The Ground line shall be wired to the Grounding Lug. The Hot or L line shall be wired to the labeled L terminal block. Refer to Figure A1 of Appendix A and Appendix C for further guidance. **It is important that the L and N lines are not reversed. Doing so will prevent the combustion control from operating.**

The GAHP-OD control board has cellular capability to allow for remote connection to the unit through Anesi's webpage-based application. A version of this application can also be reached by manually connecting to the GAHP-OD control boards Micro-B USB port as shown in Figure 9 below. For this method the contractor must use either a laptop or tablet with a Windows operating system and download the application from the ANESI website. For cellular connectivity an antenna has been provided with the heat pump and can be found inside the bag with the installation manual. Install this on the external Coax port found on the upper right-side panel of the GAHP, as shown in Figure 9.

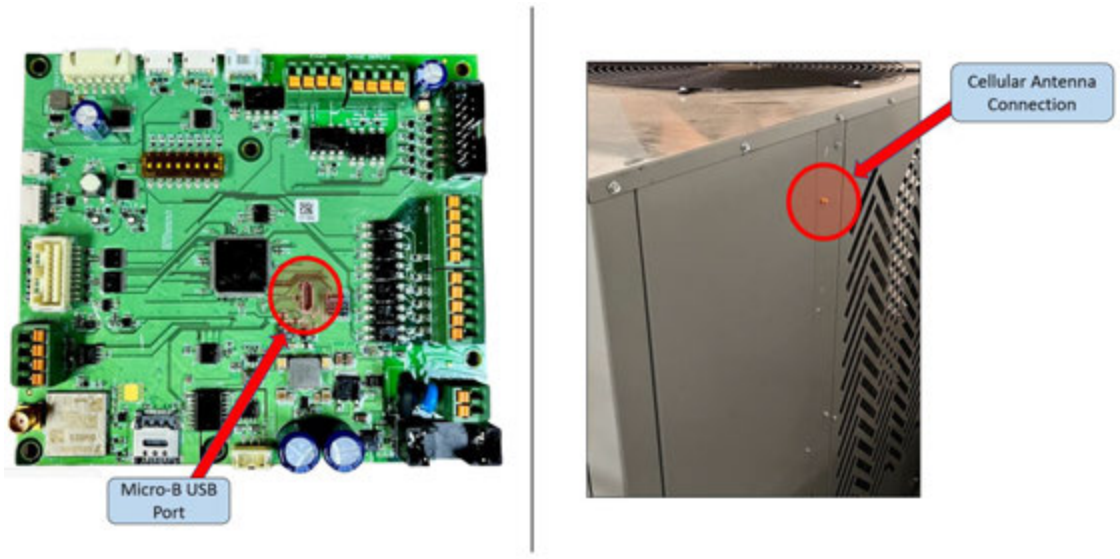

Figure 9: Micro-B USB Port & Antenna Location

Low Voltage Wiring

If installing the GAHP with an Anesi air handling unit (AHU), **Modbus communication should be used for maximum functionality**. A CAT5 cable (shielded OR unshielded & often used for ethernet) must be used and shall be run between the two pieces of equipment taking precautions to limit excessive length where possible. The cable should terminate at the "Equipment Comms" terminal on the AHU control board and the "RS485 Aux" terminal of the GAHP-OD control board as shown in Figure A2 of Appendix A. Match signals (A, B, GND) shown at the terminals for each board. It is recommended to run the CAT5 cable in a separate conduit than what is run for line power to limit noise to the signal.

When using CAT5 cable it is often sold as "twisted pairs" and it is CRITICAL to maintain signal integrity that the pairs be utilized. In other words, do not use 1 wire from each bundle but instead use the pairs as shown in Figure A3 of Appendix A.

CAUTION

Use of anything other than CAT5 cable for Modbus could result in communication issues and faults.

Alternative Option – Low Voltage Wiring

An alternative method is to use standard thermostat wires for space and/or water heating. This cable would be run to the push-style connectors on the GAHP-OD Control Board as shown in Figure A4 and A5 of Appendix A.

IMPORTANT: If Modbus communication is NOT used with the Anesi AHU, the indoor equipment will NOT be seen on the webpage app which assists with installation, monitoring, and servicing.

For Residential Applications:

If the GAHP is being installed with an Anesi air handling unit (AHU) for space heat only or combination space & water heating (COMBI), then a minimum 7 conductor cable should be run from the space heating thermostat inside the house to the AHU control board. Thermostat signals are then passed through the AHU control to the GAHP via Modbus. The required connections for each signal are as follows:

From Space Heating Thermostat to AHU control board:

- G = Fan Only
- C = 24VAC Common (when required)
- R = 24VAC Power
- W1 = Space Heat (Stage 1)
- W2 = Space Heat (Stage 2)
- Y1 = Space Cooling (Stage 1)
- Y2 = Space Cooling (Stage 2) – optional

From Anesi Indirect Storage Tank to Anesi AHU control board (refer to Figure A5 of Appendix A):

- Aquastat: No polarity; this is simply a switch closing the circuit. Connect from the “Switch” terminals on the ETC 102 to the terminals labeled “Aquastat” on the AHU control board.
- Aquastat Power: Connect to the terminal labelled “Spare 24 VAC Out” on the AHU control board. Wire to the “TR” and “C” terminals on the ETC 102 aquastat.
- Low Tank Thermistor: No polarity. This is the **BLACK** wire pre-installed on Anesi custom tanks. Connect to terminals labeled “IST Low Temp” on AHU control board.

If the alternative method of connecting the AHU to the GAHP using thermostat wires is chosen instead of Modbus, a minimum 6 conductor cable should be run from the AHU control board to the GAHP-OD control board (match terminals):

- AHU Board: R, W1, W2, and WH
- GAHP-OD Board: R, W1, W2, WH, and jumper between J1 & J2 (pre-installed from factory)
- In addition to the thermostat signals, 2 conductors for the “GAHP Error” signal must be run between the AHU and GAHP. Refer to Figures A3 & A4 in Appendix A for details.

For Commercial Applications:

For the GHP to operate in Commercial Water Heating mode DIP#1 should be switched to the OFF position as shown in Figure A8 of Appendix A.

If the GAHP is being installed with an indirect storage tank with a mid-tank Aquastat for water-heating only operation, then a 2-conductor cable should be run from the Aquastat to the GAHP-OD control board outdoors and DIP#2 should be switched to the OFF position. The required connections are as follows:

From Indirect Storage Tank to GAHP-OD control board:

- Aquastat: No polarity
- GAHP-OD Board: R and WH

Alternatively, if a mid-tank thermistor is used instead of an Aquastat, the thermistor wire would be connected to the orange wires with wire-nuts on the GAHP-OD board, as shown in Figure A6 of Appendix A. The thermistor should have a R25 rating of 10 kohm and a R25/85 rating of 3977 kohm. DIP#2 must remain in the ON position as shown in Figure A8 of Appendix A.

If the GAHP is being installed with an indirect storage tank intended to be used with a commercial water heater for space heating, then a mid-tank thermistor is required. The GAHP controls will keep the tank heated to a temperature based on an ambient reset

curve if a stage 1 (W1) heating signal is received from the indoor system or will heat to a higher fixed target if a stage 2 (W2) heating signal is received. Refer to Figure A7 of Appendix A for reference. The required signals follow:

From Indirect Storage Tank to GAHP-OD control board:

- Mid Tank Thermistor: no polarity
- GAHP-OD Board: Orange wires with wire-nuts

From Zone Controller to GAHP-OD control board:

- Zone Controller: R, W1, and W2
- GAHP-OD Board: R, W, and W2

For hydronic heating (ex. In-floor radiant installations) or water-heating only applications a circulating pump is required in the hydronic system. The (installer provided external) hydronic pump is controlled via the GAHP-OD controls. Run a 2-conductor cable from the hydronic pump relay box to the bare leads with wire nuts on the relay board located inside the GAHP control box, as shown in Figures A5 & A6 of Appendix A.

NOTE: The external hydronic pump control signal from the GAHP control board is 24 VAC intended to be connected to the coil side of a suitable hydronic pump relay. The GAHP control board cannot be used to directly power an external hydronic pump.

For Double-Wall DHW Applications:

If the installation requires a double wall between the glycol and domestic hot water as referenced in Figure 15 below, then follow the wiring schematics shown in Figures A5, A9, and A10 of Appendix A.

From ANESI Storage Tank to Anesi AHU control board:

- Aquastat: No polarity; Connect from the "Switch" terminals on the ETC 102 to the terminals labeled "Aquastat" on the AHU control board
- Aquastat Power: Connect to the terminal labelled "Spare 24 VAC Out" on the AHU control board. Wire to the "TR" and "C" terminals on the ETC 102 aquastat.
- Low Tank Thermistor: No polarity. This is the **BLACK** wire pre-installed on Anesi custom tanks. Connect to terminals labeled "IST Low Temp" on AHU control board.
- DHW Circulator Pump Power:
    - This pump must be powered through an external relay. The AHU control board cannot power the pump directly.
    - The DHW circulator pump should turn ON at the same time as the existing 3-way valve in the AHU. Therefore, the 24VAC coil for the external relay should be wired into the power for the existing 3-way valve inside the AHU, "3-way valve (1)" as shown in Figure A9. This can be done by either:
        a) splicing into the control wires
        b) doubling the wires at the control board push-in connector.
            - If this method is chosen, ensure that there are no bare wires exposed at the connector. The connectors are sized to fit a maximum of two 18 AWG wires simultaneously.
    - Line power for the pump may be wired directly from the terminal block in the AHU as shown in Figure A10. The Hot wire should be ran to the switch side of the external relay coil, whereas the Neutral and Ground may be tied directly to the pump.

Section 2.6 Flue Gas Exhaust System Installation

The flue pipe and bracket are shipped with the GAHP, packaged in the evaporator compartment. To install the flue vent, complete the following steps:

1. Remove the left-hand side panel and unwrap the parts. Replace the side panel.
2. Loosen the two screws on the side of the lid and install the bracket as shown in Figure 10.
3. Loosen the screws holding the cover plate where the flue pipe is to pass through.
4. Remove the panel below the flue pipe opening.
5. Insert the flue pipe through the hole in the upper side panel, then insert it into the flexible coupling as shown in the right image of Figure 10.
6. Snap the flue vent pipe into the bracket shown on the left in Figure 10 and secure it to the lid of the GAHP.
7. Install the retaining wire clip around the flue vent.
8. Tighten the two hose clamps on the flexible coupling and replace the bottom panel.

9. Tighten the screws holding the cover plate around the flue pipe.

CAUTION

The stainless-steel flue pipe can reach temperatures up to 150°F (65.5°C) during operation. Proceed with caution when working near it.

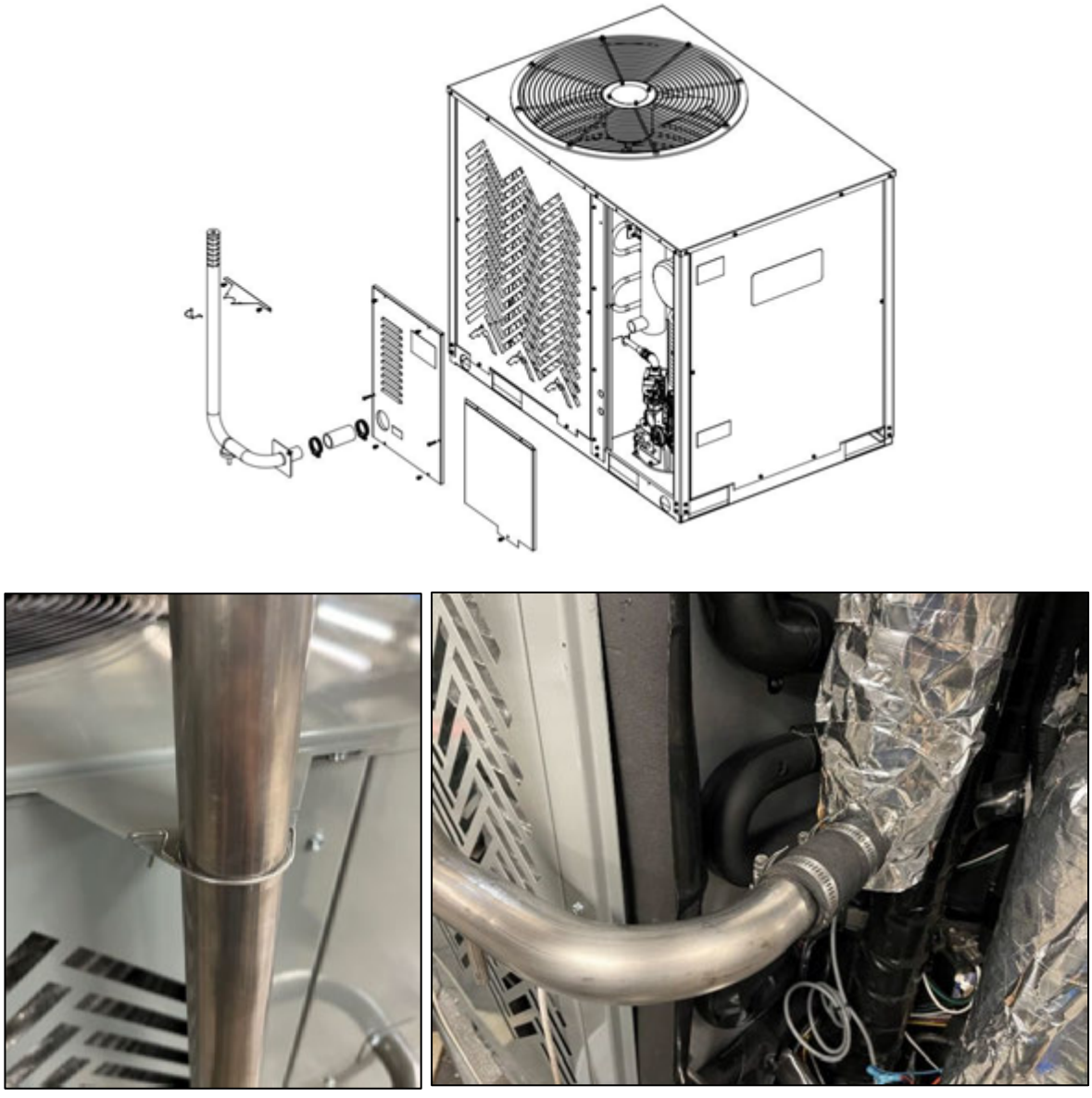

Figure 10: Flue Pipe and Bracket Installation

Section 2.7 Condensate Disposal

Flue gas condensate disposal must be implemented in a manner that meets local codes. In some cases, this may involve running the condensate through a neutralizer prior to the drain, particularly where metal pipes are installed.

Condensate tubing must have a temperature rating equivalent to:
Minimum = Lowest expected outdoor air temperature
Maximum = 150°F (66°C)

> **NOTE:** If Option 1 is selected for condensate management, then condensate tubing must be capable of withstanding the maximum temperature specified by the heat trace used.

The options for disposing of the condensate are listed below:

Option 1: Run **INSULATED and HEAT TRACED** tubing (3/8-inch, 9.5 mm) to a suitable drain. It is critical that a trap be created with the tubing to prevent flue gas from escaping through the tubing. If the condensate line is run to an indoor drain, it is recommended that it be "bundled" with the hydronic lines to help maintain temperature above freezing. Local codes should be followed, but the recommended slope for the drain line is a minimum of 1/4 inch per 1-foot of horizontal run (21 mm per meter).

⚠ DANGER

If a water trap is not formed in the condensate tubing going to an indoor drain, flue gasses can escape that contain carbon monoxide. If this method is used it is recommended to install a carbon monoxide alarm within 10 ft (3 m) of the end of the tubing.

Test the drain line for adequate flow prior to starting the GAHP following these steps:

1. Confirm the drain line has been installed and properly anchored along its entire length, with the trap installed.
2. Remove the line from its connection point indoors and use a clamp or fold it back on itself to seal it off.
3. Remove the rubber plug in the top of the flue vent outdoors.
4. Pour water into the flue vent to fill the trap plus enough to fill the indoor section of condensate tube.
5. Reinstall the flue vent plug.
6. Return indoors and with the line pointed into a bucket or drain unclamp it.
7. Confirm water properly drains and then reinstall the indoor end to the drain or condensate pump.

IMPORTANT: If the condensate drain line is not properly sloped the unit may experience combustion issues resulting in a loss of heat and necessary service call.

An automatic temperature regulating heat trace is advised to help limit power consumption during warmer weather. The heat trace may be wired back into the terminal strip in the GAHP for power.

Option 2: Drain condensate directly into a pit adjacent to the unit. Details are provided in the following figures. The bottom portion of the pit should be filled with limestone to help neutralize the acidity in the condensate and to assist with drainage.

In extreme cold weather it may be necessary to install heat trace & insulation around PVC tube shown in Figure 11 as well. For all cases where temperatures are expected to be well below 0 °F (-18 °C) the insulation and heat trace should run the entire length of the condensate tubing AND the flue vent, i.e., all the way back to the termination of the vent from the cabinet.

As shown in Figure 11 below, the bottom of the drain line should extend a minimum of 6 inches (152 mm) below the frost line. Once the hole is dug a drainage test shall be performed to confirm that the condensate can drain fast enough into the soil to prevent build-up in the drain.

This model produces roughly 1/2 oz/min (15 mL/minute) of condensate at full load. To perform the drainage test, prior to backfilling the hole with neutralizer material (limestone) pour enough water onto the soil that there is standing water; then confirm the water drains within the appropriate amount of time based on the values above.

The parts detailed in the image for flue gas condensate management are not provided with the heat pump.

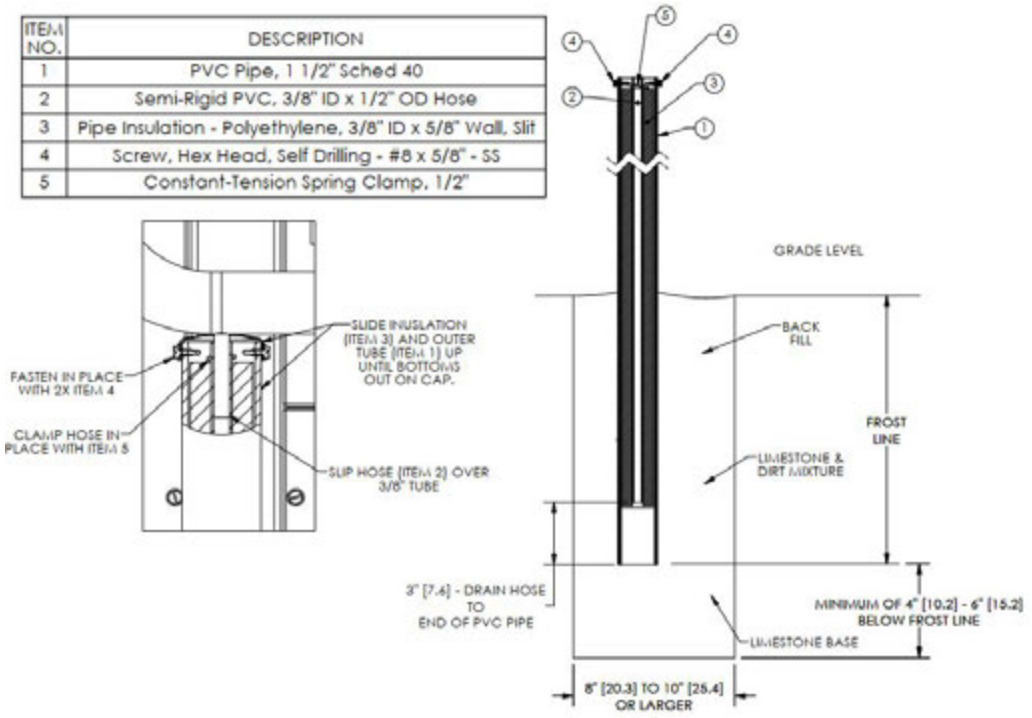

Figure 11: Condensate Drain Pit Recommendation

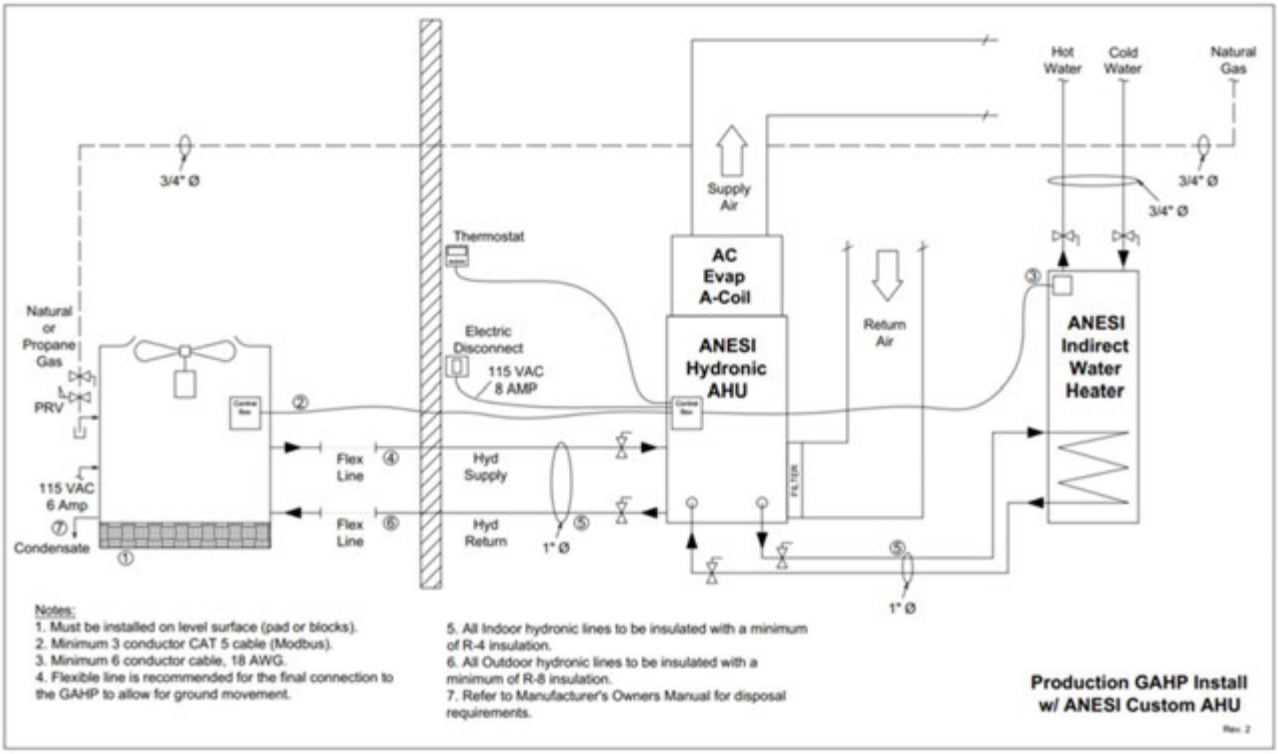

Figure 12: GAHP Installation with a COMBI system (AHU + IST)

Section 2.8 Applications

For all applications the recommended aquastat (tank temperature) setting is 120°F – 125°F (49°C – 52°C). The maximum storage tank temperature setting is 140°F (60°C).

Section 2.8.1 Residential Forced-Air with ANESI AHU

If the intended use is to provide space heating and water heating as a residential COMBI system with one of ANESI's custom hydronic air handlers, then Figure 12 should be followed. When operating in COMBI mode the indoor AHU controls will switch back and forth between space and water heating but will not do both simultaneously. The controls inside ANESI's custom AHU have been optimized to monitor both time and temperature in each mode to ensure the homeowner retains comfortable indoor and domestic hot water temperatures.

For forced-air space heating only using the Anesi AHU, the same setup as shown in Figure 12 can be followed, but plumbing and electrical is ignored to the indirect storage tank. The two ports that normally feed the indirect storage tank from the AHU are shipped from the factory sealed with plugs. Confirm these are still present prior to charging the hydronic system if a tank is not installed.

Section 2.8.2 Commercial with Indirect Storage Tank

If the GAHP's intended use is to provide only domestic hot water (DHW) or be used as a pre-heater for a conventional (storage tank or tankless) water heater(s) in a commercial water heating application, the recommended method is to install a suitable indirect storage tank (IST) indoors and plumb it directly to the GAHP. An installation schematic is shown in Figure 13. For commercial water heating applications, the outlet of the new indirect tank will feed into the cold-water supply of the conventional commercial water heater. The GAHP then preheats the water to increase the overall efficiency of the water heating system while maintaining functionality of the commercial water heater for peak loads.

When a DHW recirculation return system is used, it is required that the circulation return be connected to either the primary system tank or the mid-point of the GAHP (indirect) tank, but NEVER to the cold-water inlet of the GAHP tank.

For commercial water heating applications, the DIP switch on the GAHP-OD control board must be changed to allow the heat pump to operate at full capacity when in water heating mode. Refer to Appendix A7 for DIP switch settings.

Along the section of line returning from the indirect storage tank to the GAHP, a hydronic pump, expansion tank, purge & fill valve, automatic air vent, strainer (maximum 40 mesh, minimum 100 mesh), isolation valves, and a glycol feeder are required. The following specifics outline minimum requirements for the various components.

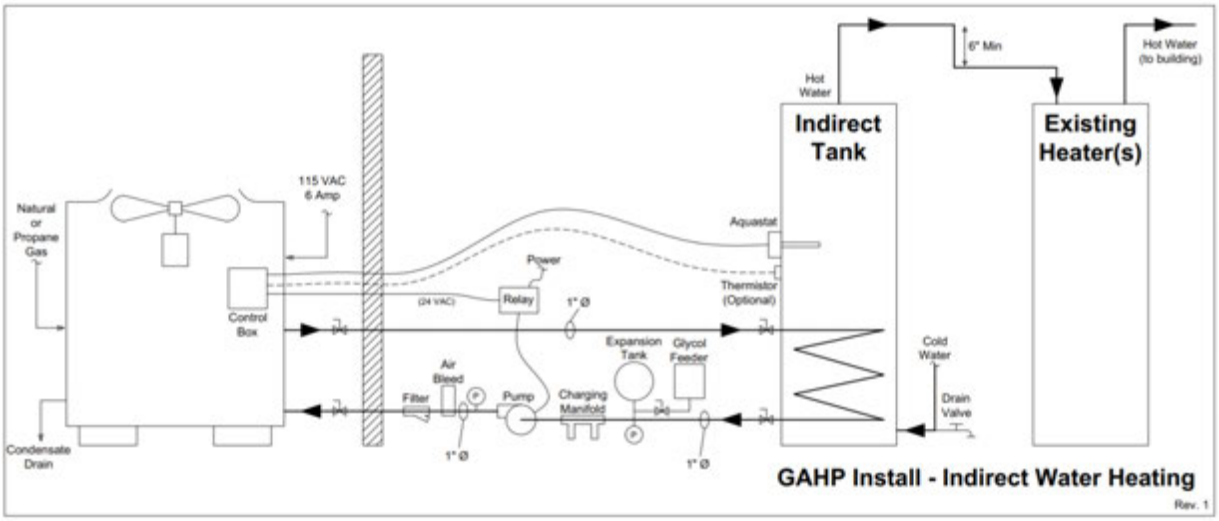

Figure 13: GAHP Installation with an Indirect Storage Tank

Expansion Tank: minimum 2 gallons (7.6 L) - Based on a hydronic system volume of 10 gallons (38 L) which equates to over 300 feet (91 m) of 1-inch PEX.

Glycol Feeder: minimum 2 gallons (7.6 L) - A glycol feeder maintains the hydronic system pressure as residual air is eliminated over time by the automatic air vent. Set the feeder to maintain a system pressure of 15 to 18 psi (103 to 124 kPa). **DO NOT use a conventional service water make-up valve assembly as the introduction of plain water will reduce the glycol concentration over time & could allow the hydronic lines inside the GAHP to freeze.**

Hydronic Pump - Sized to handle pressure drop through the GAHP, indoor equipment, and the length of connecting plumbing (accounting for elbows and tees) assuming 4.3 gpm (16 lpm) of a 40% inhibited propylene glycol-water mixture at 110 °F (43 °C). Normally, nominal **3/4 inch** pipe size is adequate for this flow rate, although a larger size may be required for very long runs or if an excessive number of elbows are required. Refer to Appendix D for guidance on calculating the total pressure drop and selecting a pump.

A hydronic pump using a high-efficiency ECM motor is recommended to minimize pumping power. A variable or multi-speed pump is also recommended to avoid needing to throttle extra pressure via a valve. The hydronic pump should be controlled via the GAHP-OD control board. The GAHP-OD control board provides a 24 VAC signal to close a (installer provided) relay coil to turn the hydronic pump on and off. A relay control box should be installed near the hydronic pump as shown in Figure 13. The 2-conductor cable going from the relay coil in the relay control box to the GAHP will be spliced to the 2 pigtails coming out of the relay control board as shown in Figures A5 & A6 of Appendix A.

Indoor Heat Exchanger - The indoor heat exchanger may be either an indirect storage tank or a plate heat exchanger. Specifications for each may be found in Appendix G.

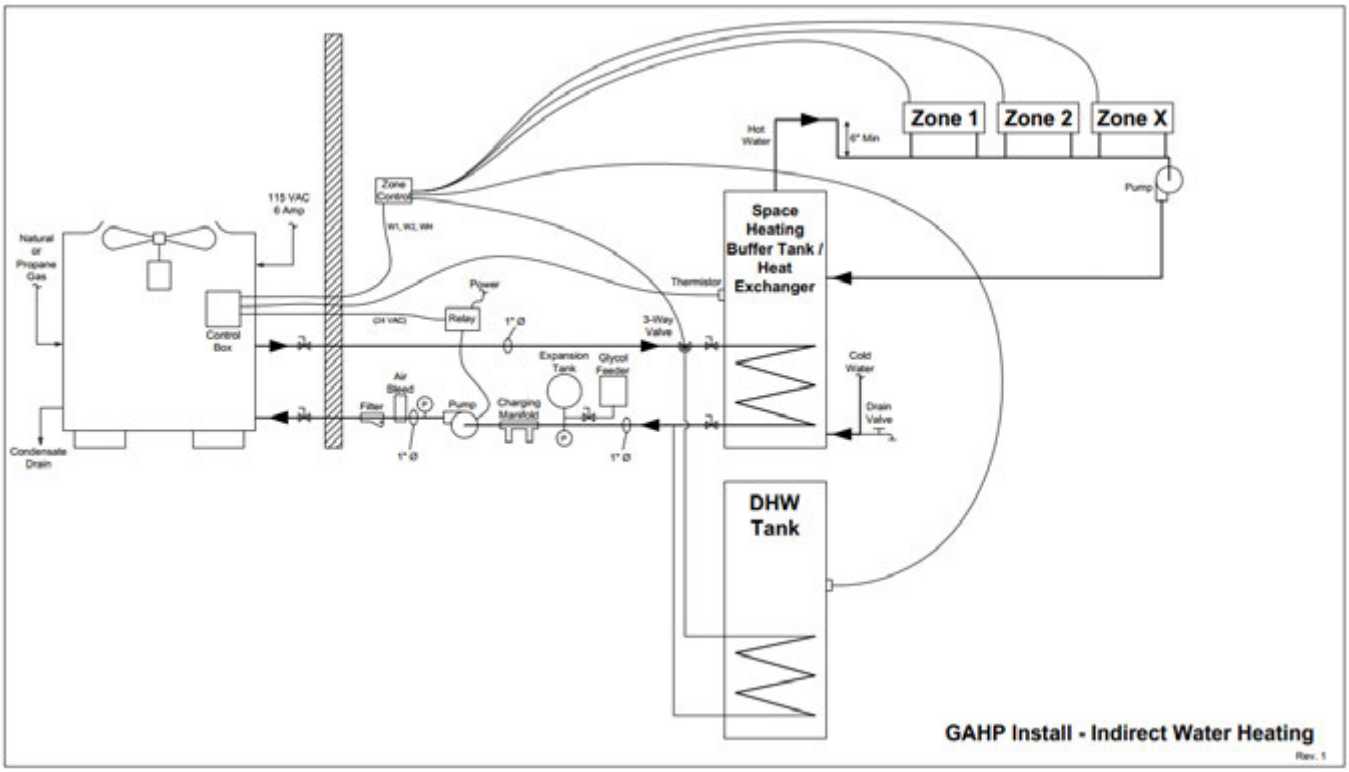

Figure 14: GAHP Installation with a Residential Hydronic System

Section 2.8.3 Residential Hydronic Space and Water Heating

For residential hydronic (zoned) systems, there are a multitude of different ways the heat pump can interface with the indoor heating system, including systems where glycol is used in the entire system, or only in a small closed loop between the GAHP and an isolation heat exchanger (IST or plate heat exchanger). One option is to install an indirect storage tank in between the indoor hydronic loop and the GAHP as shown in Figure 14. A zone controller must be utilized to receive heat calls from each of the various zones. This controller should then push those calls as either a space heat (W1 or W2) or water heat (WH) call to the GAHP. It is advised that an IST be installed on the glycol side of the loop for domestic hot water to retain higher efficiencies when heating the tank to temperatures higher than are required when space heating.

Please contact your local ANESI sales representative, qualified contractor, or the ANESI website for more detailed information for how to properly size, install, and control a hydronic space and water heating system.

Section 2.8.4 Domestic Hot Water (Double-Wall Requirement)

For jurisdictions that require a double-wall between the domestic hot water (DHW) and the glycol system, a double-wall plate heat exchanger (PHX) is required. A separate loop is required to circulate water out of the tank and through the PHX. For specific details on the size PHX and hydronic pump to be used please contact Anesi technical support. Figure 15 can be used as reference to what a general installation might look like for a residential application where the ANESI AHU is being used.

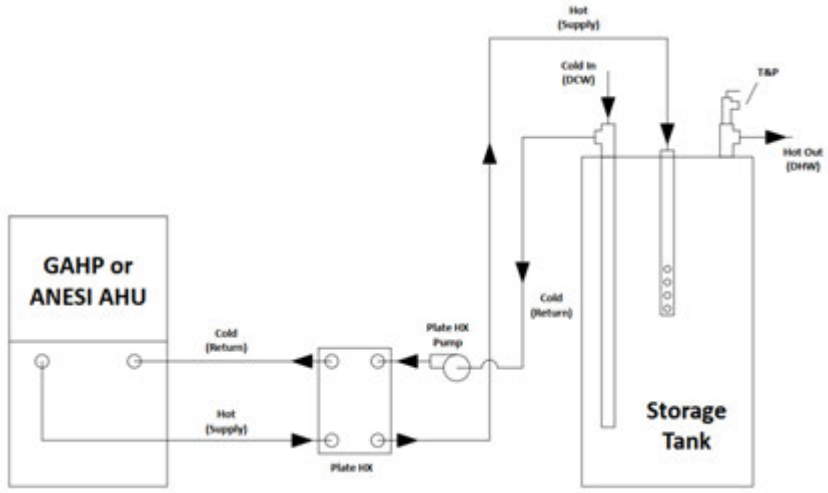

Figure 15: DHW with a Double-Wall PHX

For any applications outside of those listed above please contact Anesi technical support for guidance.

NOTE: When a call for heating is sent to the GAHP, the GAHP-OD control board will act to turn the hydronic pump on via the 24 VAC signal and confirm that the flow rate is above the minimum required. At the end of the heating cycle, the GAHP will leave the hydronic pump on for a 3.5-minute cool down period.

Section 2.9 Hydronic System Filling

The hydronic system must be filled before operating the GAHP. Prior to filling the hydronic system and making connections to the GAHP, the system must be cleaned and checked for leaks. The concentration of propylene glycol shall be based on the lowest expected outdoor air temperatures for the installation location. **The exact percentage of glycol/water to achieve adequate freeze protection will vary based on the brand of inhibited propylene glycol used**. Figure 16 can be used as reference for a generic inhibited propylene glycol. The installer must check what is needed for the brand that is used.

When diluting the glycol to the appropriate concentration distilled or deionized water should be used to create the final mixture. Tap water may be used during the cleaning step but using tap water as the final mixture could cause early degradation of the corrosion inhibitors. The PH level of the glycol mixture should be checked. If the range is outside of 8.5 – 9.5 then it should be adjusted using “pH Up” or “pH Down” until within range.

Open the ball valves located at the back of the GAHP and any others in the system once the system is cleaned and leak checked. If installed with an Anesi air handling unit (AHU), follow the charging instructions in the AHU manual. If the GAHP is installed in an application similar to that shown in Figure 13, then connect to the Charging Manifold (purge & fill valve) with a charging cart or similar apparatus as shown in Figure 17.

Temperature °F	Temperature °C	Percent (vol.) Fluid Concentration Required For Freeze Protection Volume %
20	(-7)	19.1
10	(-12)	30.9
0	(-18)	38.3
-10	(-23)	44.7
-20	(-29)	48.9
-30	(-34)	53.2
-40	(-40)	57.4
-50	(-46)	60.6
-60	(-51)	63.8

Figure 16: Inhibited Propylene Glycol Freeze Protection

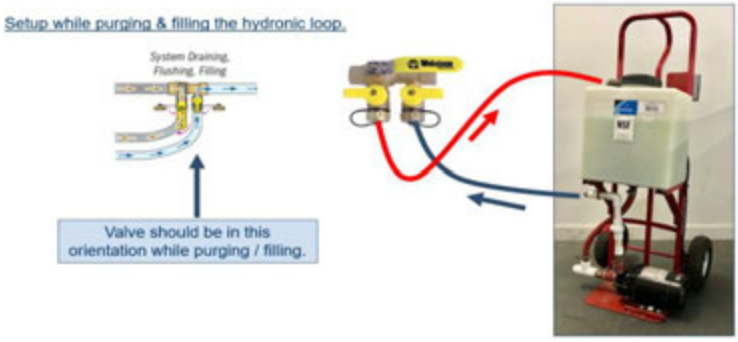

Figure 17: Example of Connecting to a Charging Cart

CAUTION

The hydronic lines **MUST NEVER** be cleaned by flowing through the GAHP or debris could clog the internal heat exchangers causing unit performance issues and possibly high-pressure faults.

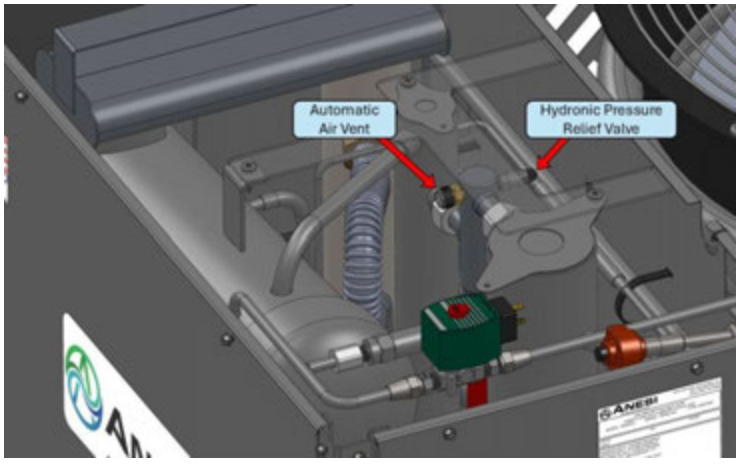

Figure 18: GAHP Hydronic Air Vent & PRV Locations

There is an automatic air vent valve and a hydronic pressure relief valve (PRV) on the GAHP hydronic supply manifold inside the cabinet. The vent will remove any trapped air from the highest point of the GAHP hydronic plumbing. The hydronic PRV will open at 60 psig (413 kPa) and close at 25 psig (172 kPa). The location of these components are shown in Figures 18 & 19.

Once charging is complete and all air has been purged, disconnect the charging apparatus, and return the purge & fill valve to its normal operating position. Next turn on the glycol feeder connected to the hydronic system and set the target pressure between 15-18 psig (103 to 124 kPa). Allow the feeder to run until the system is fully pressurized. Top off the glycol mixture in the reservoir once complete.

A bypass loop before the GAHP might be required depending on the method used to clean the hydronic lines.

Section 2.9.1 Hydronic Flow Adjustment

Flow Verification

After plumbing, wiring, and glycol filling has been completed between the AHU, heating appliance, and IST/ST/PHX (if applicable), the flow rate must be verified. The flow rate will vary based on the temperature of the hydronic fluid. In order to prevent potential faults from lower flow rates at cold hydronic temperatures, the rate should be dialed in while the system is operational, and the fluid is warm (at least 10 minutes after initiation of a heating cycle). The flow should then be monitored as the system shuts down and the fluid cools to confirm the rate is still within the appropriate range.

If connected to an ANESI GAHP the flow rate may be seen by either connecting directly with a laptop or windows-based tablet to the board's micro-USB port and logging into its user interface OR remotely via the webpage-based app. If connected to a different heat source, follow its instructions.

The flow rate for the GAHP should be 3.5 to 5 GPM (13 to 19 LPM) with an **optimal target of 4.3 GPM**. If flow is outside of this range, follow the steps outlined below:

Too much flow (Greater than 4.3 GPM [16 LPM])

If the flow is above the limit of 5 GPM (19 LPM), the following steps are required. If the flow is between the

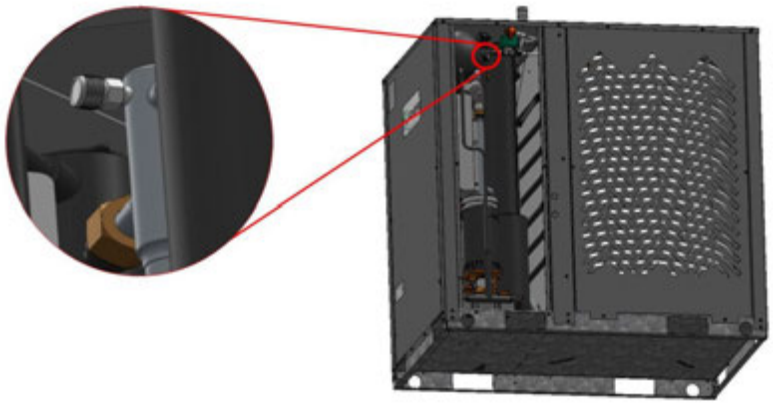

Figure 19: GAHP Hydronic Air Vent Location (Side View)

target 4.3 GPM (16 LPM) and the max limit of 5 GPM (19 LPM), the following steps are recommended to ensure the best performance from the appliance.

- For best results a flow control valve such as a globe valve should be installed. Another option is a Caleffi QuickSetter that incorporates a balancing valve and a flow meter into one.

Note: There are ball valves located at the supply & return of the GAHP that may be utilized, if necessary.

- Throttle the flow in the system as close to the targeted 4.3 GPM (16 LPM) as possible.

Too little flow (Below 3.5 GPM [13 LPM]):

If the flow is below the limit of 3.5 GPM (13 LPM), the following steps are required. If the flow is between the target 4.3 GPM (16 LPM) and the min limit of 3.5 GPM (13 LPM), the following steps are recommended to ensure the best performance from the appliance.

- Ensure all ball valves are completely open.
  - Reminder: There are 2 isolation valves located at the supply & return ports of the heat pump.
- If the flow is still below the acceptable limit:
  - Check the calculations completed from Appendix D and adjust them as needed to ensure they are correct.
  - Then:
    - See if any fittings or excessive length of lines can be removed to decrease the excess pressure drop to bring the flow above the minimum range (or closer to the target)
    - If feasible, increasing the piping diameter will result in a decreased pressure drop to bring the flow above the minimum range (or closer to the target)
    - Otherwise, a larger pump or a booster pump is required.
- Once the steps above have been decided:
  - Attempt to isolate as many sections of the system as possible to retain the glycol-solution in the lines.
  - Then (as applicable):
    - Remove and replace the applicable fittings and lines.
    - Install the selected booster pump (if needed).
      - For commercial water heating applications, a larger circulation pump could be chosen and swapped instead of adding a booster. The booster pump is only required when installed with the ANESI AHU where the circulation pump is built in.
      - Refer to ANESI AHU manual for recommendations on booster pumps or contact your local distributor for further guidance.

Section 2.10 Gas Valve Adjustment & Conversion to Propane

The final step is to adjust the gas valve for proper combustion, allowing for the local elevation and gas heating value. The GAHP left the factory set for natural gas and has been adjusted for slightly rich combustion to ensure successful lighting during commissioning. The top of the flue exit pipe has a plug that should be removed to insert a flue gas analyzer, as shown in Figure 22. **Remember to open the manual gas valve supplying the GAHP.** Review Section 3.1 to be familiar with the GAHP startup sequence. Remove the left bottom panel to access the gas valve for adjustment.

Section 2.10.1 Propane Conversion

Skip this section if using natural gas. To convert to propane, adjust the "**R.Q. ADJ.**" screw on the gas valve shown in Figure 20 as item 7 & Figure 21. Use a 2.5 mm hex key to turn it 1 turn clockwise. This provides a good starting point for the following procedure.

Section 2.10.2 Gas Valve Adjustment

It may take a few tries for the burner to light if air has not been purged from the gas line. It is recommended to CAREFULLY loosen the gas line at the inlet of the gas valve to purge the air out, and then retighten. Wait for any leaked gas to dissipate before continuing. Once all other installation steps are complete, apply power to the GAHP and set the indoor thermostat or aquastat to heating and wait for the GAHP to start. The **P.R. ADJ** screw on the gas valve as shown in Figure 20 as item 6 and Figure 21 has a cover screw that needs to be removed before adjusting.

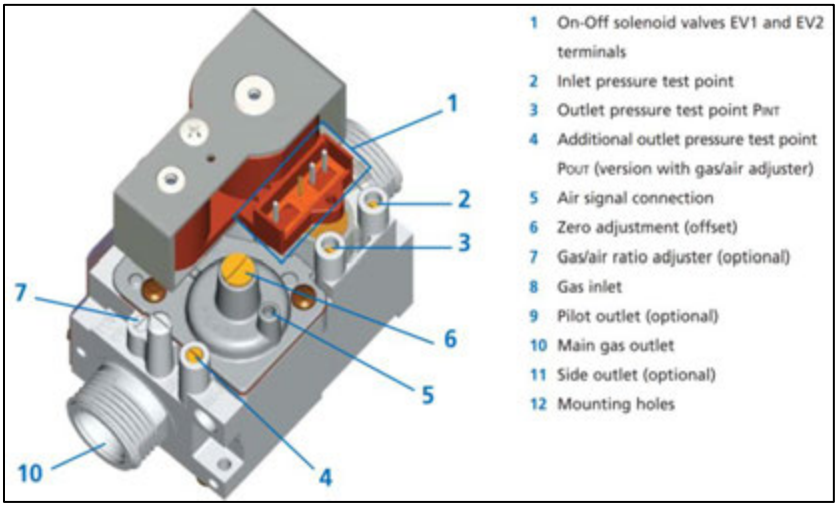

Figure 20: Gas Valve Features

The combustion control board will temporarily lock out after 4 failed ignition attempts. The controls will reset the board to allow it to try again until 15 minutes have passed. At which time the controls will lock out for 1-hour. After an hour the combustion control will clear the fault and attempt again. It will repeat this sequence until successful ignition is achieved. To reset this fault manually during commissioning, use the reset button on the GAHP-OD board according to Appendix B Section B3.3. If after several attempts (after confirming that air has been bled from the gas line) the GAHP does not light, try turning the **P.R. ADJ** screw (4 mm hex) clockwise half a turn each subsequent attempt until the burner lights. This makes the gas and air mixture richer, which usually improves ignition.

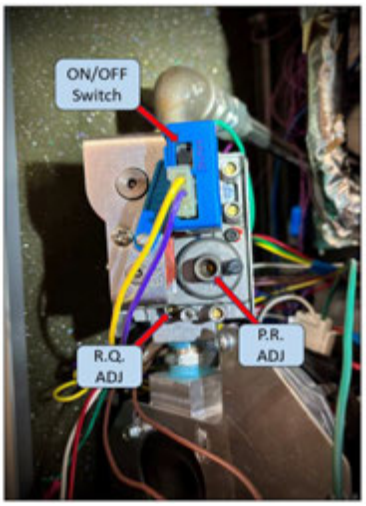

Figure 21: Gas Valve Adjustment Location

If after making several adjustments to the gas valve the burner still is not lighting, the gas valve should be adjusted back to its factory settings before further adjustment. This is done by CAREFULLY turning both the **P.R. ADJ** and **R.Q. ADJ** screws clockwise until they reach the bottom. DO NOT torque the screws when they reach bottom! Stop turning when you feel greater resistance, to establish a starting point. Turn **P.R. ADJ** counterclockwise 4 turns and the **R.Q. ADJ** counterclockwise 5 turns (4 with propane).

Upon successful ignition, wait 5 minutes for the GAHP to reach operating temperature and then insert the flue gas analyzer probe into the top of the flue pipe. Log into the GAHP-OD control board using the Anesi APP, or if cellular connection is not available with a micro-USB cable and a Windows operating system laptop or tablet. Within the app the contractor is able to manually control the firing rate. See Appendix F for details. Perform the following steps:

1. Set the firing rate to 90%.
2. Adjust the **R.Q. ADJ** screw on the gas valve (Figure 21) with a 2.5 mm hex key until flue gas composition is as follows. Turn **clockwise** to increase excess air (increasing O_2 or decreasing CO_2):
    a. **Natural Gas:** Excess Air 25% to 28%, Oxygen 4.2% to 4.6%, and CO2 9.1% to 9.4%
    b. **Propane:** Excess Air 6% to 18%, Oxygen 1.2% to 3.2%, and CO2 11.7% to 13.1%
3. Set the firing rate to 30%.
4. Adjust the **P.R. ADJ** screw on the gas valve (Figure 21) with a 4 mm hex key until flue gas composition is as follows. Turn **counterclockwise** to increase excess air (increasing O_2 or decreasing CO_2):
    a. **Natural Gas:** Excess Air 25% to 28%, Oxygen 4.2% to 4.6%, and CO2 9.1% to 9.4%
    b. **Propane:** Excess Air 6% to 18%, Oxygen 1.2% to 3.2%, and CO2 11.7% to 13.1%
5. Repeat Steps 1 to 4 until no further adjustment is needed.
6. The CO (carbon monoxide) level should be below 100 ppm for Natural Gas and 250 ppm for Propane but must always be below 400 ppm. If it is higher, that means combustion is incomplete and most likely the gas valve is set too rich.

7. With natural gas, and the firing rate at 90%, clock the gas meter. Be sure no other gas appliances are running at the same time. Using the local gas utility's reported HHV, calculate the input rate using the calculation below:

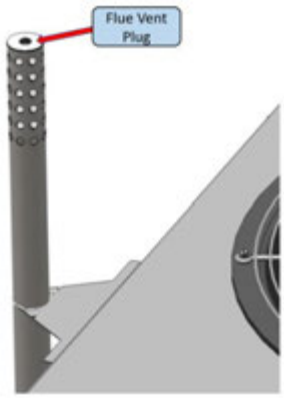

Figure 22: Flue Gas Analyzer Measurement Port

$$Qi = \frac{V}{t} * 60 * HHV \qquad (US\ Customary\ Units)$$

Where:
Qi = Input Rate, (Btu/hr)
V = Volume of gas measured, (cubic feet)
t = Time, (minutes)
HHV = Higher Heating Value (Btu/ft^3)
Note: If Local HHV is not known use 1020 Btu/ft^3.

$$Qi = \frac{V}{t} * 60 * HHV * 947.82 \qquad (SI\ Units)$$

Where:
Qi = Input Rate, (Btu/hr)
V = Volume of gas measured, (cubic meters)
t = Time, (minutes)
HHV = Higher Heating Value (MJ/m^3)
Note: If Local HHV is not known use 41 MJ/m^3

8. Adjust the maximum firing rate to achieve an input rate of 27,400 ±500 Btu/hr. If using propane, set the maximum firing rate to 85%.
9. Adjust the minimum firing rate to 7,950 ±500 Btu/hr. If using propane, set the minimum firing rate to 22%. **Note that incomplete combustion may occur (indicated by high CO levels) if the firing rate is set below 18%. In that case, increase the minimum firing rate until the unit reliability achieves complete combustion.**
10. As a final check to confirm that the new settings will still allow the burner to successfully light the gas, remove manual control of the firing rate in the app and cycle the power switch on the gas valve to OFF then ON. This creates a lost flame error, and the combustion controls will attempt to reignite the burner. If the burner fails to ignite, repeat steps 1 through 10. If assistance is needed, contact your ANESI distributor or a qualified contractor.

NOTE: The gas valve adjustment screws adjust the fuel-air ratio of the zero-governor modulating gas valve. The adjustment screws are sensitive and SMALL adjustments should only be made. Do not exceed ¼ turn for each adjustment and wait a few minutes for the system to settle into the new setting before checking the new emissions reading. Keep track of adjustments made so that the screws can be returned to the factory position if required. If the outdoor temperature is above 70 °F (21 °C) adjust the gas valve for flue gas oxygen and excess air towards the low end of the range (CO_2 towards high end). If the temperature is below 32 °F (0 °C) adjust flue gas oxygen and excess air towards the high end of the range (CO_2 towards low end).

Section 2.10.3 Adjustment for High Altitude

If installing the GAHP in locations considered as "high altitude" the HHV might differ from what is suggested above in Section 2.10.2. The contractor should look up the actual HHV measured by their local gas utility (often found on their website) and use that in the equations above.

Section 2.11 Installation Checklist & Regular Inspection

See Appendix E for an installation checklist to review before leaving the site.

Section 3 Operation

The GAHP operates automatically when the GAHP-OD control board is connected to the appropriate indoor equipment. During operation, the controls continuously monitor several key temperatures, pressure, and safety switches. If one of the monitored safety switches reports an error condition the unit will turn the gas off and wait for the error condition to clear prior to continuing operation. If the error does not clear the unit will shut down and wait for a manual reset.

Section 3.1 Procedure for Start-up

When a thermostat signal is present, the GAHP will initiate a startup procedure. The start-up procedure and timing are detailed below.

NOTE: The GAHP controls institute a short-cycle timer of 5 minutes after each shutdown. This timer must clear before the unit starts.

1) Space or water heat demand signal received.
2) The hydronic pump is turned on (if not controlled by indoor controls) and flow is confirmed.
3) The solution pump is turned on for a short duration to prime the desorber with solution before firing the gas burner.
4) A combustion signal is sent to the combustion control board and the controls will go through an ignition sequence to light the burner.
5) Once ignition is confirmed:
    a. The solution pump is turned on.
    b. The evaporator fan is turned on and ramped up to speed.
    c. The condenser hydronic solenoid will begin cycling to control the high-side pressure.
        i. The hydronic flow rate will be slightly lower than normal during this period. The valve cycling will cease once pressure has been achieved and is steady.
    d. The combustion rate is held at a reduced rate for 60 seconds and then will modulate to the rate needed to maintain the hydronic supply temperature.
6) Operation continues until the thermostat signal is removed.

The controls will vary certain parameters based on the type of thermostat signal received. These differences are as follows:

- W1 = Stage 1 Space Heating: hydronic supply temperature follows the desired ambient reset curve.
- W2 = Stage 2 Space Heating: hydronic supply temperature is set to a maximum fixed setpoint based on the type of application.
- WH = Water Heating: hydronic supply temperature is set to its maximum fixed setpoint based on the type of application.
- P = *Future controls, not yet available*
- Y = *Future controls, not yet available*
- Y2 = *Future controls, not yet available*

Section 3.2 Procedure for Shutdown

The GAHP will begin shutting down when all thermostat signals are removed. The shutdown procedure and timing are detailed below.

1) The gas valve is closed.
2) After 2 minutes, the solution pump will turn off.
3) After 3 minutes, the combustion blower and the evaporator fan will turn off.
4) After 3.5 minutes, the hydronic pump is turned off.

Section 3.3 Defrost Operation

If the GAHP senses that the evaporator has accumulated too much frost, it will initiate a defrost sequence. The unit will not initiate a defrost cycle if the ambient temperature is above 45°F (7.2 °C). The GAHP will continue heating during the defrost cycle (about 6 minutes) but at a reduced rate.

Section 4 Monitoring and Safety

Section 4.1 Unit in Modulation

The controls will attempt to restrict the maximum hydronic RETURN temperature, maximum desorber temperature, and maximum high side pressure to ensure safe operating conditions. The combustion rate is reduced as any of these parameters approach their specified limits. If this reduction in firing rate is sufficient to regulate the temperature or high side pressure, the GAHP will continue to run at the reduced fire rate. However, if the temperatures or high side pressure decrease, the firing rate will be allowed to increase again.

Section 4.2 Monitoring

During operation, the GAHP controls continuously monitor several critical parameters including desorber temperature, hydronic return temperature, hydronic flow, high side pressure, solution pump speed (rpm), and safety switches. If any error is detected, the controls will promptly initiate the appropriate shut-down sequence.

Desorber Temperature – When this temperature exceeds the specified limit the gas supply to the system is turned off and the system is allowed to cool down before re-ignition. If over-temperature conditions occur 3 times within 1 hour, the system will shut down and lock out, and a manual reset is required.

Hydronic RETURN Temperature – When this temperature exceeds the safety limit the controls will turn off the gas until the temperature drops. If the temperature has not reduced below the threshold within 5 minutes the unit will issue an error and temporarily shut down.

High Side Pressure – When the high side pressure exceeds the specified limit, the controls will turn off the gas and let the system cool down. After the pressure has reduced the burner is re-ignited. If over-pressure conditions occur 3 times within 1 hour, the system will shut down and lock out, requiring a manual reset to be performed.

Hydronic Flow Meter – The controls continuously monitor the hydronic flow rate and will immediately shut down the GAHP if the flow rate falls below the minimum level. After 5 minutes, the error will reset on its own and the GAHP will automatically try to restart.

Solution Pump Motor Speed – The motor speed is continually monitored when the pump is powered. If the speed is too low, the controls will automatically shut down and enter a lockout state.

Section 4.3 Safety Switches

Sealed System High-Pressure Switch (NC Switch, set at 400 psig (2760 kPa), auto reset)

- Interrupts the power to the gas valve through the combustion control board turning off the gas, the system will go into a hard lockout.
- The high-pressure switch error must be manually reset by cycling power to the combustion control board. This can be done through the service app, or by turning off GAHP power at the circuit breaker or disconnect box.

Desorber Shell High-Temperature Switch (NC Switch, 435 °F (224 °C), auto reset)

- Interrupts the power to the gas valve through the combustion control board turning off the gas, the system will go into a hard lockout.
- The high-temperature switch error must be manually reset by cycling power to the combustion control board. This can be done through the service app, or by turning off GAHP power at the circuit breaker or disconnect box.

Air Proving Switch (NO Switch, 0.10 inH2O)

- Tubing connects the air-pressure switch to a hose barb on the burner manifold.
- The normally open switch is used to ensure the blower is providing air flow and generating static pressure when the gas valve is on.
- The combustion control board will report an error and prevent the burner from lighting if the switch detects air flow when unexpected or no air flow when expected.

Section 4.4 Refrigerant Pressure Relief Valve

An automatic pressure relief valve set at 450 psig (3100 kPa) is in the vapor line connecting the leveling chamber to the condenser (near the top of the unit). This relief valve should not need to function, as the heat input to the GAHP will shut off if the pressure switch opens at 400 psig (2760 kPa). It serves to protect the sealed system if the pressure rises due to conditions beyond the GAHP's control, such as a nearby structure fire.

If the pressure relief valve opens, ammonia in vapor form will be released for a few seconds. Everyone should leave the immediate area.

The total ammonia refrigerant charge in the GAHP is approximately 10 pounds (4.5 kg), with a significant portion bound with water. Caution should be exercised at all times.

Ammonia has a very pungent smell that can be detected by the human nose at concentrations as low as 5 ppm. Under normal circumstances, individuals will seek relief from ammonia well before its presence becomes a serious health hazard. Air containing amounts of ammonia in which a person is willing to remain is generally not dangerous; however, as with any irritating atmosphere, care should be taken to prevent prolonged exposure.

Section 5 Maintenance

This section addresses general maintenance items. For detailed service instructions, see the Anesi service manual. Common maintenance tasks are as follows:

Task	Frequency
Clean Air Inlet Box and Louvres	Annually
Replace Combustion System Components	As Needed
Check Combustion Flue Gas Emissions	Annually
Clean Flue Passages and Burner	As Needed
Clean Evaporator Coil	Annually
Clean Condensate Drain Line	Annually
Lubrication of Solution Pump	As Needed
Check Levelness of GAHP	Annually

Section 5.1 Combustion System Maintenance

Section 5.1.1 Combustion Air Inlet Box and Louvers.

The left top cabinet panel includes a vent to supply air for the combustion system. The louvers and box attached to the inside of the panel should be cleaned annually with a soft brush.

To service the combustion air inlet, remove the flue pipe, front and left top panels. The flue pipe is attached with a hose clamp and can be accessed from the front. Clean any debris out of the air inlet box inside the left top panel.

Section 5.1.2 Combustion System

The combustion system (Figure 23) should only require a minimum amount of attention or maintenance. Contact an Anesi trained contractor if service is required. If a qualified professional is unavailable, contact your local distributor.

The flue gases should be checked on an annual basis. Check to ensure that levels are still within those outlined in Section 2.10 & adjust as necessary.

NOTE: The Carbon Monoxide (CO) levels should be below 100 ppm for Natural Gas and below 250 ppm for Propane. If levels are higher (even if O2 & CO2 are within range) it is a sign that there could be an issue that needs investigation. This could be but is not limited to: condensate backing up, a blockage in the flue, or a dirty mesh burner. Refer to the service manual for guidance.

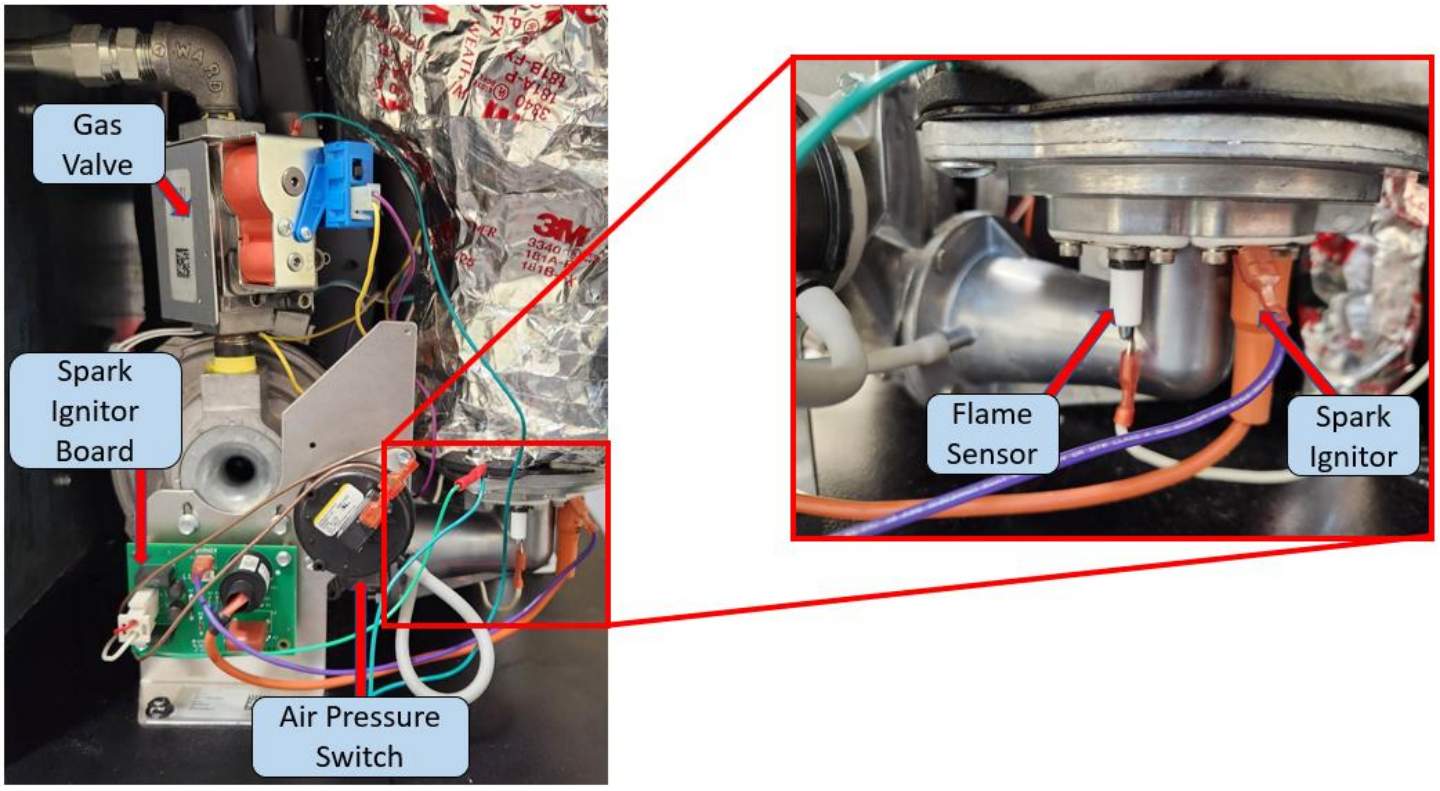

Figure 23: Combustion Components

Section 5.1.3 Cleaning Flue Passages and Burner

The flue passages and burner should be inspected and cleaned if combustion problems are observed such as loud noises during ignition, reduced heating output, or inability to adjust the gas valve to achieve the required flue gas levels. This maintenance should only be completed by a qualified service technician.

Section 5.2 Evaporator Coil Cleaning

Annually, inspect the evaporator coil for cleanliness. Cleanliness of the coil is important to a successful preventative maintenance program. Remove any leaves or other debris. Also check that the drain holes in the bottom of the evaporator base are clear.

If there is grime on the evaporator coil that cannot be removed by hand, it is recommended to clean the coil using a water hose with a spray-nozzle attachment. Perform the following steps to clean the coil:

1. Shut down the GAHP by turning the thermostat to OFF and/or the Aquastat to Vacation. Once it is completely shut down, turn off the power at the disconnect.
2. First, try spraying water through the fan guard and between the fan blades to wash the grime off the fins from the inside out. Be careful not to use too strong water spray so as not to bend or damage the coil fins. If the coil cannot be suitably cleaned in with this method, continue to the following steps.
3. Remove the right-side panel. Disconnect the evaporator fan motor by unplugging the connector.
4. Remove all the sheet metal screws securing the top cover. Lift the fan end of the cover and pull the fan electrical conduit and connector out of the interior panel.
5. Lift the top cover with the fan assembly off of the GAHP and carefully set aside. DO NOT REST THE COVER ON THE FAN BLADES!
6. Spray water from the inside out of the coil to remove as much grime and debris as possible. Be careful not to use too strong water spray so as not to bend or damage the coil fins.
7. Once the coil appears clean, reinstall the fan assembly, ensuring the blades are free to rotate, and restore power to the unit.

Section 5.3 Cleaning the Condensate Drain Line

1. Disconnect the condensate line from the heat pump termination port.
2. From the termination point indoors, using compressed air or nitrogen at low pressure, blow out any debris from the line.
    a. Secure the outdoor end of the drain line prior to this step to prevent blowing debris onto unwanted objects.

3. Reconnect the drain line on both ends.
4. Perform a drain test as outlined in Section 2.7.

Section 5.4 Lubrication

The solution pump is the only moving part that may require lubrication. This is unlikely because the oil does not circulate and is not consumed. The pump has a dipstick integrated with the orange breather. Oil levels should be checked when the heat pump is OFF. To check the oil level, unscrew the breather-dipstick assembly, wipe off the dipstick with a clean towel, reinstall, and remove again to check the level. There is a line scored into the dipstick. The oil should be somewhere between the bottom end of the dipstick and this line. If oil needs to be added, use the oil specified in Section 6.

⚠ WARNING

Do **NOT** use any oil other than what is specified in Section 6 of this manual. Standard motor oil WILL deteriorate the primary seal between the refrigerant and the oil bath potentially causing a complete loss of charge!

The fan, motor, and blower do NOT require lubrication.

Section 5.5 Levelness Check

The GAHP should be checked annually for levelness following the requirements outlined in Section 2.2. If the ground has settled and the GAHP is out of tolerance, then the use of shims may be used to return the level within spec.

Section 5.6 Resetting the System

The control system can be reset from a safety lockout by performing the sequence outlined in Appendix B Section B3.3 on the push button located on the GAHP-OD control board. The system should be idle when performing this reset. If operational, remove any heat calls to the system and wait for its cooldown (less than 5 minutes) to complete.

Section 5.7 Ammonia-Water Sealed System

The sealed system should not require maintenance. If it does, a qualified service technician must be contacted to perform the appropriate inspections and any servicing.

Section 6 Replacement Parts

Part	ANESI Part Numbers
Service Kit - Flame Sense	680003
Service Kit - Spark Ignitor	680004
Service Kit - Air Pressure Switch	680007
Service Kit - Burner	680063
Service Kit - Flue Baffles	680062
Service Kit - Flue Vent	680010
Service Kit - Pump Oil	680011
Service Kit - Dip Stick	680012
Service Kit - Fan Guard	680013
Service Kit - Fuses	680014
Service Kit - Hydronic Vent/Relief	680015
Service Kit - NC Vent Cap, Sealed	680016
Service Kit - Cellular Antenna	680017
Service Kit - Flue Transition O-Rings	680044

For any parts not listed in the table above contact your local distributor.

Appendices

Appendix A Control Box Wiring, DIP Switches, & Fuses

GAHP Control Board Fuse Size: 1A, 250V, 5mm x 20mm, Cartridge Style

Combustion Control Board Fuse Size: 3A, 32V DC, Spade Style (Littelfuse: ATO3)

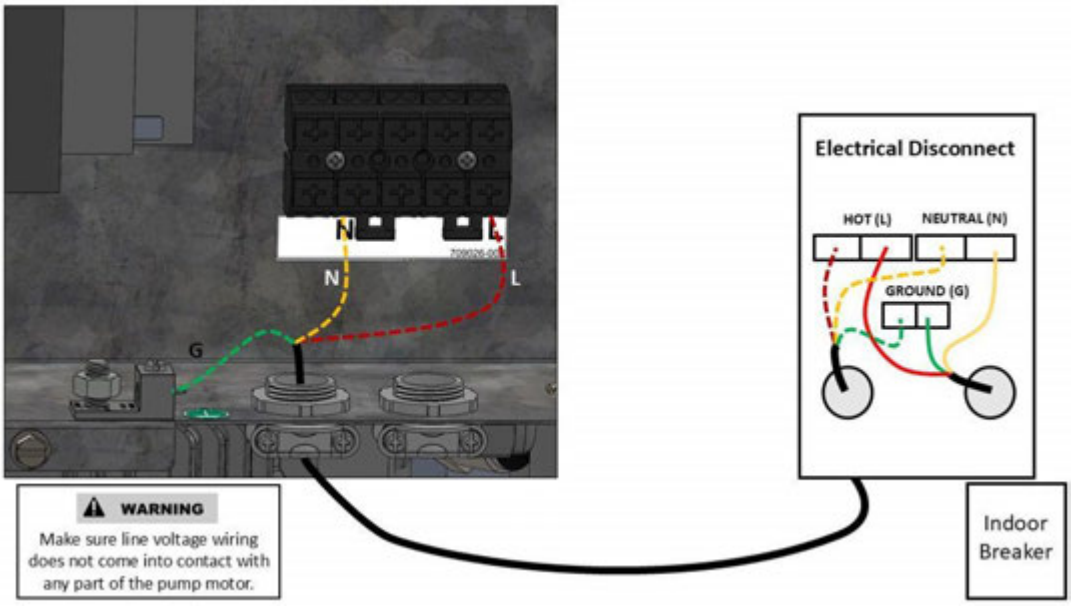

Figure A1: Wiring Line Voltage to GAHP Control Box

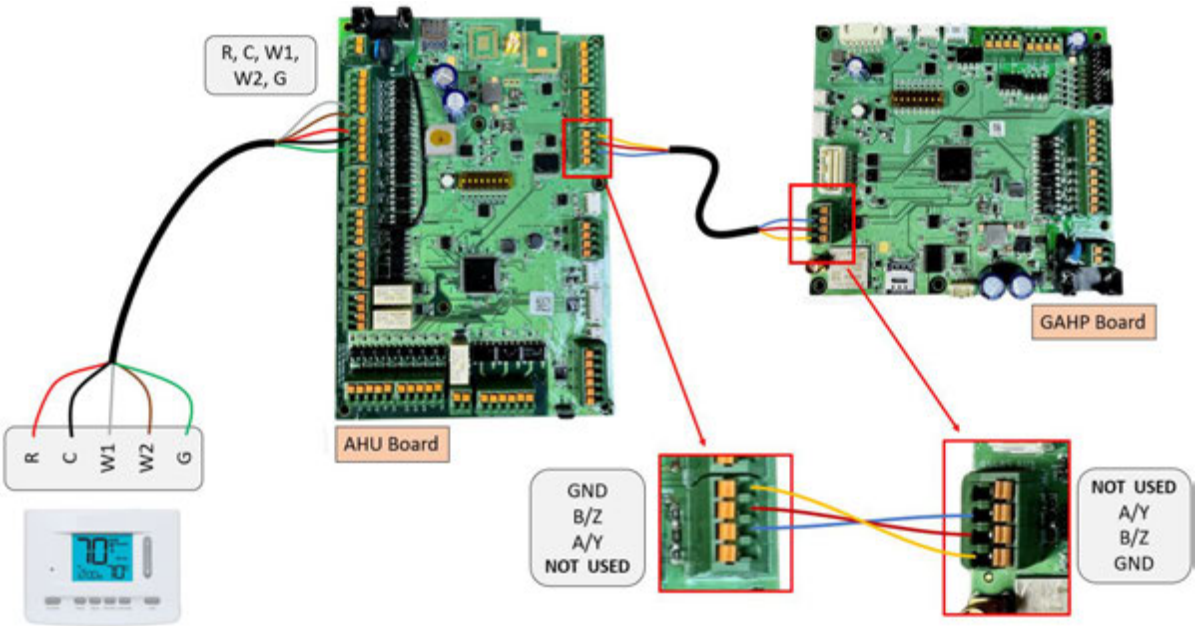

Figure A2: Residential Space Heating - Modbus Wiring (w/ Anesi AHU)

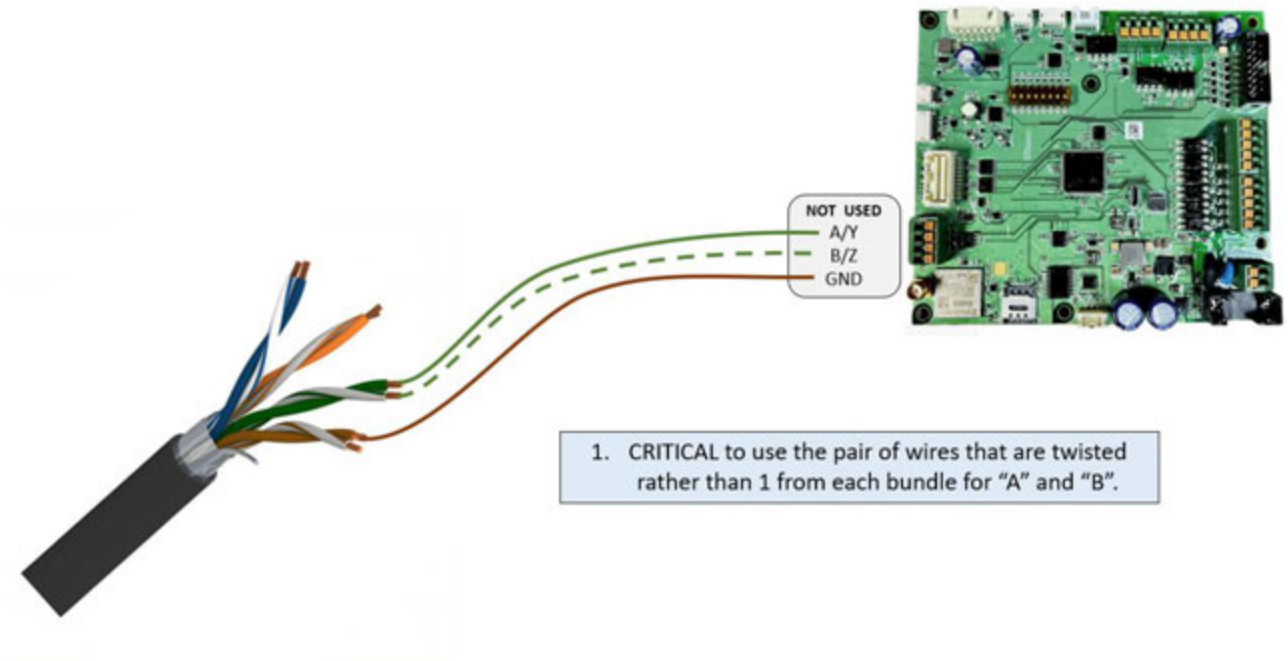

Figure A3: CAT5 Cable Pairs

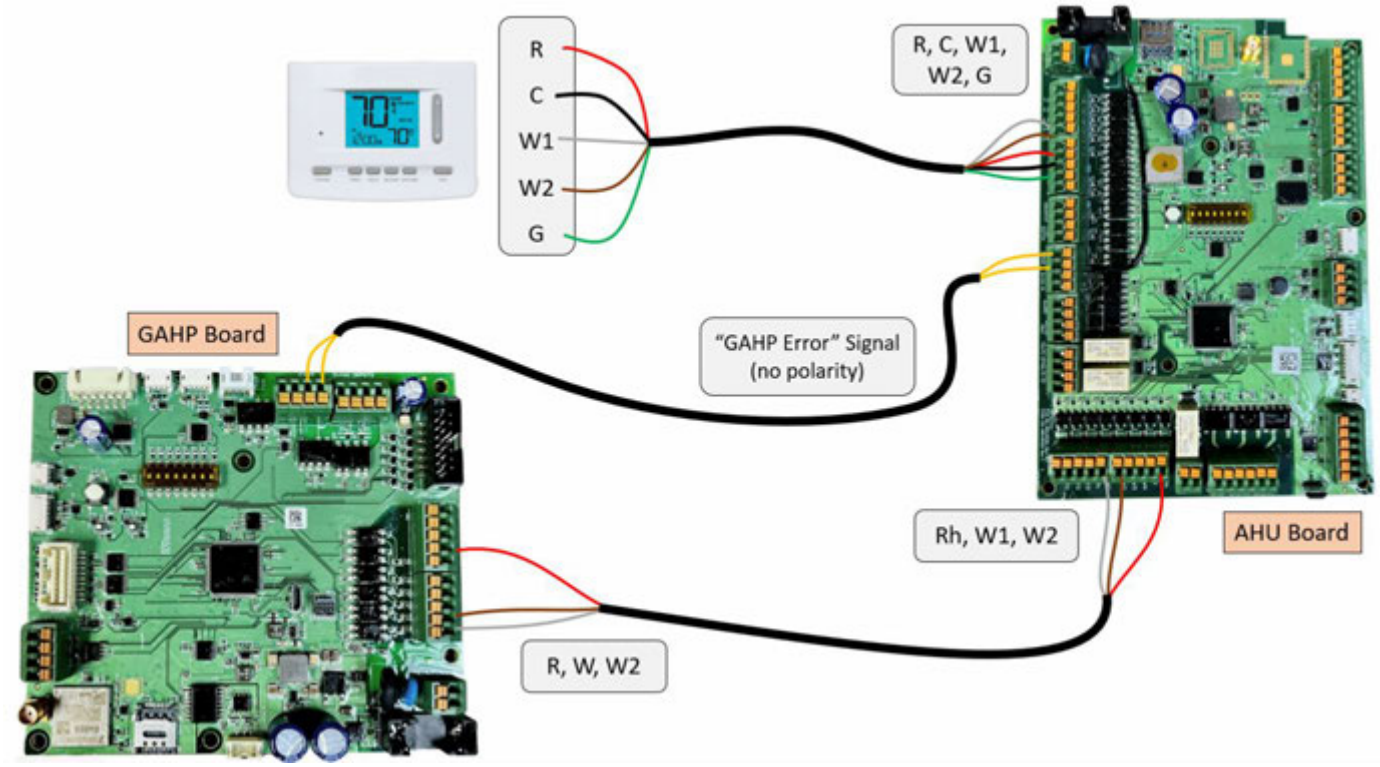

Figure A4: Residential Space Heating – Alternative Wiring (Thermostat Signals)

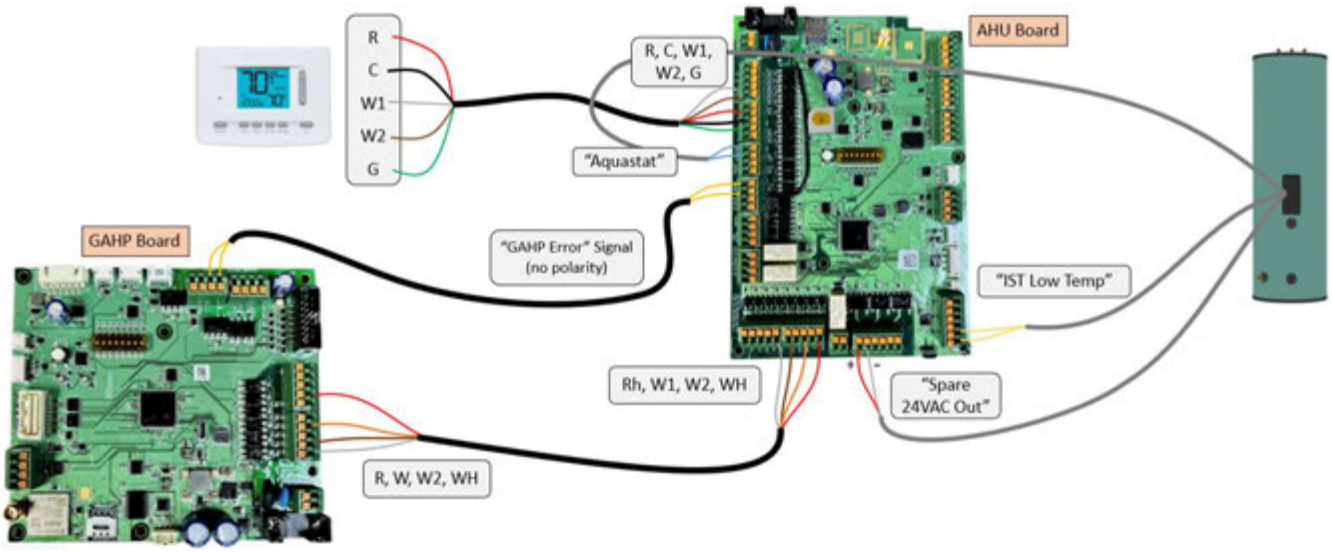

Figure A5: Residential - COMBI (space + water heating) Wiring with Anesi AHU

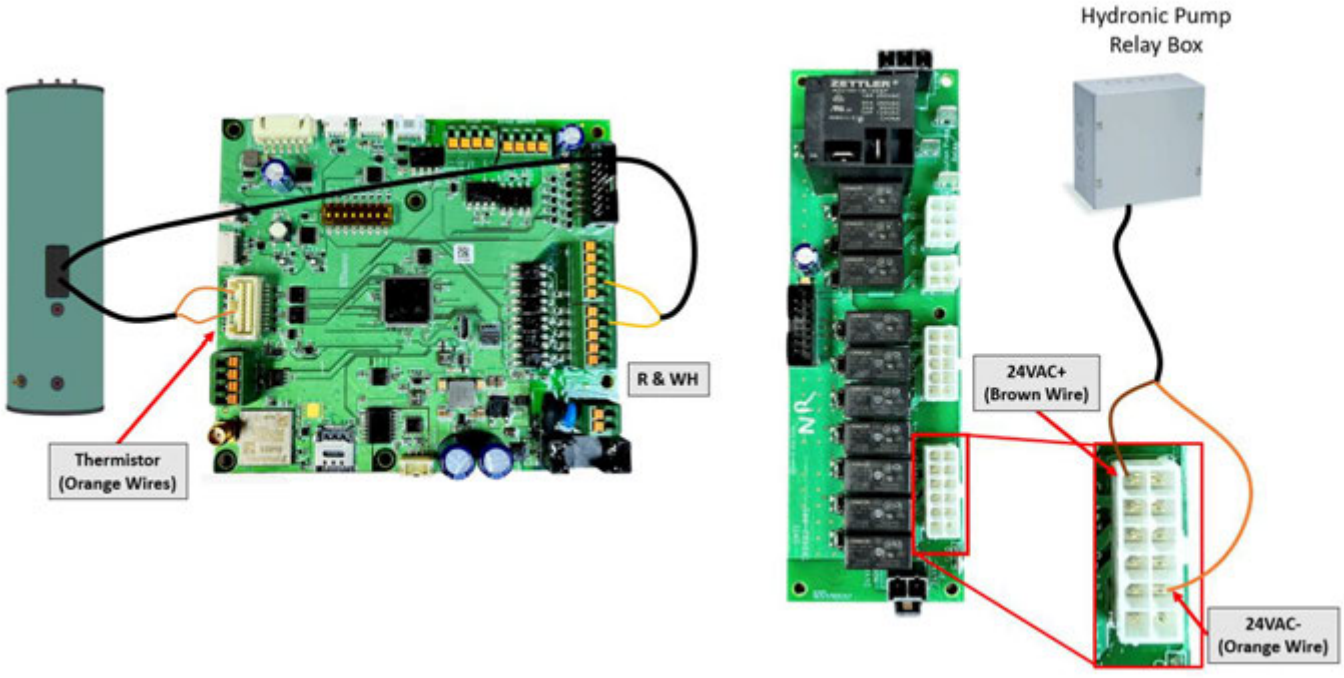

Figure A6: Commercial - Water Heating Only Wiring

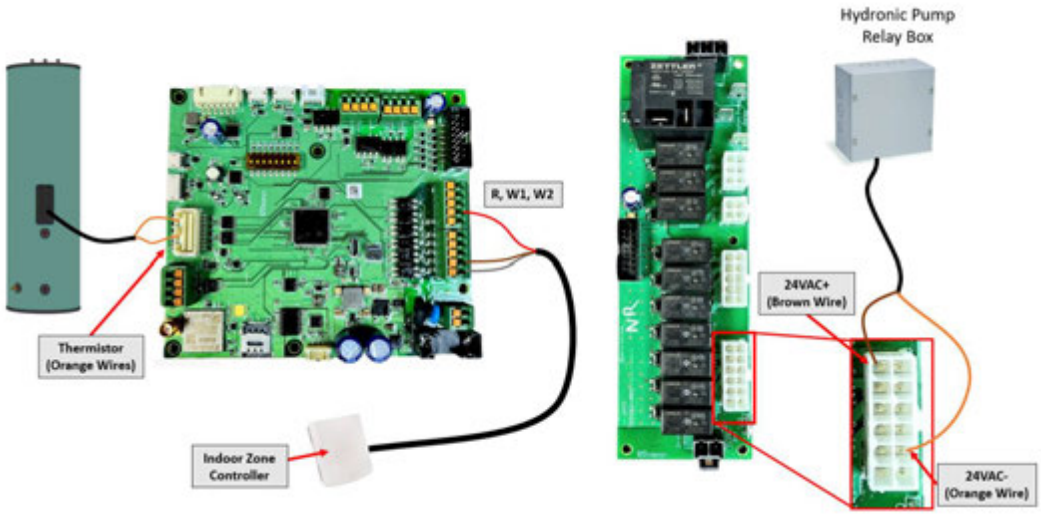

Figure A7: Commercial - Space Heating Only Wiring

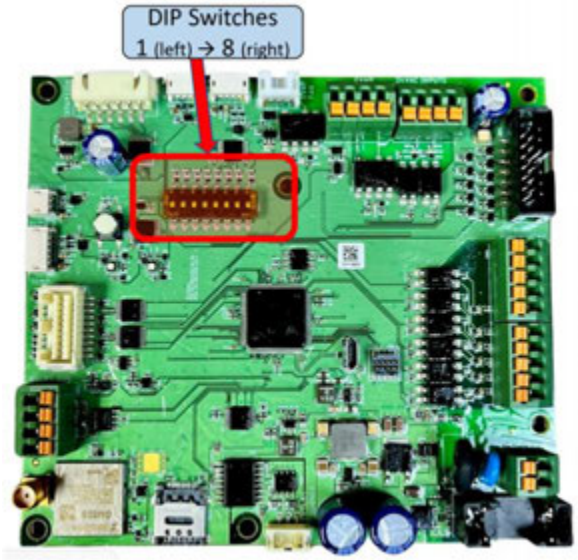

GAHP-OD Control Board - DIP Switch Settings			
DIP #	Function	ON (UP)	OFF (DOWN)
1	Application Type	Residential / COMBI	Commercial Water Heating
2	Mid Tank Thermistor	Installed	NOT Installed
3	Backup Boiler (Hydronic Apps)	NOT Installed	Installed
4	Application Type	Refers to DIP #1	Hydronic Residential
5	Solution Pump Speed Faults	Enabled	Disabled
6	Not Used	--	--
7	Not Used	--	--
8	Not Used	--	--

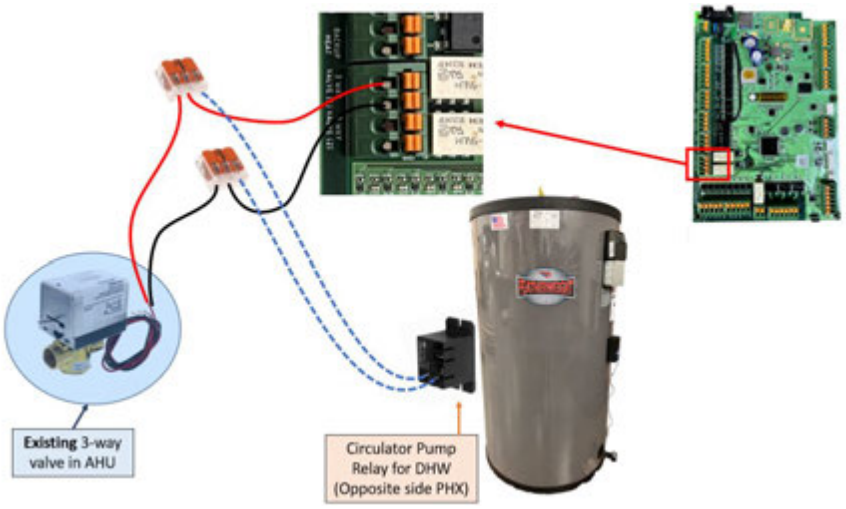

Figure A9: DHW Circulator Pump **Low**-Voltage Wiring (for Double-wall DHW Applications)

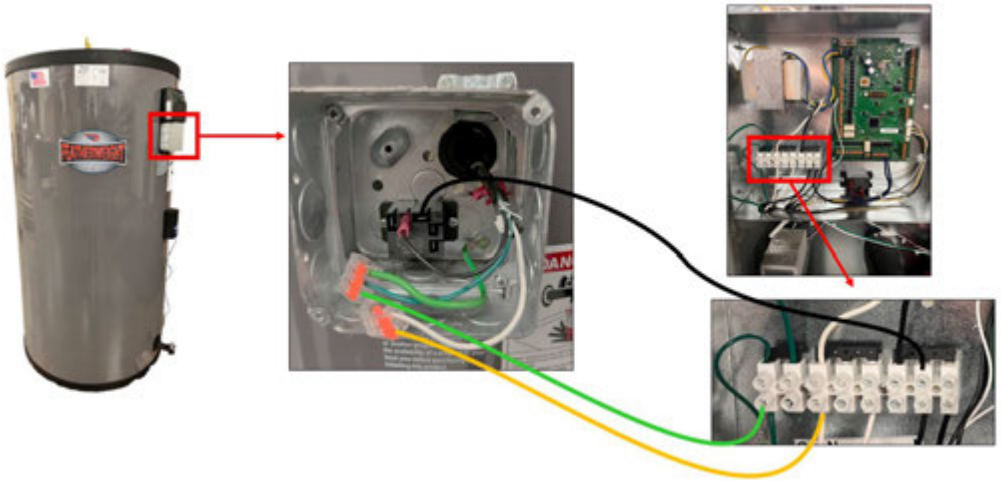

Figure A10: DHW Circulator Pump **High**-Voltage Wiring (for Double-wall DHW Applications)

Appendix B Warnings and Errors

B1 COMBUSTION BOARD LED DISPLAY INTERPRETATION

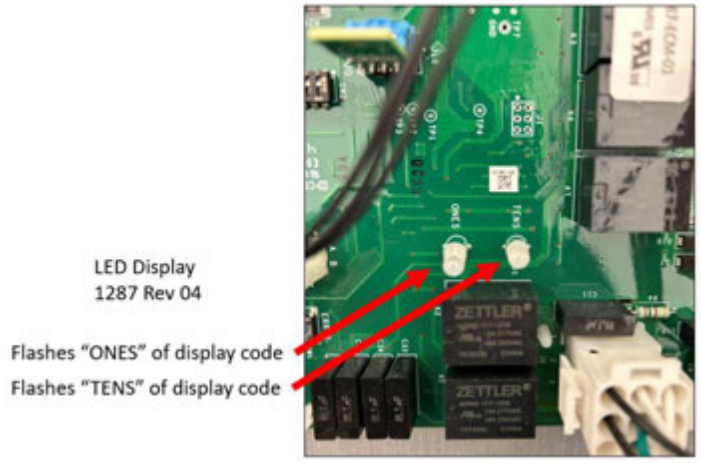

Table B1: LED Display for Error

Display code (Decimal)	Color	Description
11	RED	Flame (Prime). Flame is detected outside of normal operations by prime burner flame rod
12	RED	No Ignition (Prime). Prime burner exceeds a number of trials for ignitions.
13	RED	Flame Drop Out (Prime). Prime burner flame loss count exceeds a threshold
14	RED	Gas Valve (Prime). Prime burner gas valve is shorted to 24VAC
15	RED	Gas Valve High (Prime). Prime burner modulation/staging failure. The failure indicates that gas valve state is low when it must be high, o high when it must be low
31	RED	Flame (Prime). Flame is detected outside of normal operations by flame rod.
32	RED	No Ignition (Prime). reserved for future use.
34	RED	Gas Valve (Prime). Burner gas valve is shorted to 24VAC
35	RED	Gas Valve High (Prime). Modulation/staging failure. The failure indicates that gas valve state is low when it must be high, or high when it must be low
41	RED	Air Zero. Air pressure switch is closed when inducer is off
42 or 62	RED	Blower ON. Blower is still rotating when it must be off
43	RED	Air Flow. Air pressure switch is open when it is expected to be closed
44 or 63	RED	Blower OFF. Blower is not rotating; or blower speed outside the range
45	RED	Fuse Blown. Fuse is open
51 or 72	RED	Over Temperature. Over temperature limit is open
52	RED	Startup Failure. Safe startup failure - Time spent in Purge exceeds Max setting or Time spent in Ignition exceeds 25 seconds - Check Air Switch
53	RED	Over Pressure. Over pressure limit is open
54	RED	ID Plug Failure. Reserved for future use.
55	RED	System Failure. Control board failure, gas valve relays, safety relays, etc

Table B2: LED Display for Warning

Display code (Decimal)	Color	Description
11	YELLOW	Prime burner flame rod aged warning. Indicates that flame rod indicates low current.
13	YELLOW	Prime burner retry on the ignition or flame dropout. Call for heat prime burner is in RETRY
52	YELLOW	Lost communication. Control is in idle mode, keep alive timeout is expired
53	YELLOW	Manual override. Control is in idle mode, manual override is in off position

Table B3: LED Display for Other Failures

Display code	Color	Description
11	GREEN/YELLOW	Control is idle. Prime burner is in off.
12	GREEN/YELLOW	Call for heat, startup. Burner state PURGE.
13	GREEN/YELLOW	Call for heat, prime heating. Prime burner is running. Burner states GAS_ON, WARMUP, RUN.
Steady	RED	24VAC failure, ID Plug, or MCU initialization RA state, hard lockout. Control is not functional.
Rapid	RED	ID Plug failure. ID plug failure to initialize, control is not functional.

Table B4: LED Display for Normal Operation

Display code (Decimal)	Color	Description
11	GREEN	Control is idle, prime burner functional. Prime burner is in state OFF.
12	GREEN	Call for heat, startup. Burner state PURGE
13	GREEN	Call for heat, prime heating. Prime burner is running, burner states GAS_ON, WARMUP, RUN
33	GREEN	Call for heat. Prime burner is running.

B2 GAHP Control Board LED Display Interpretation

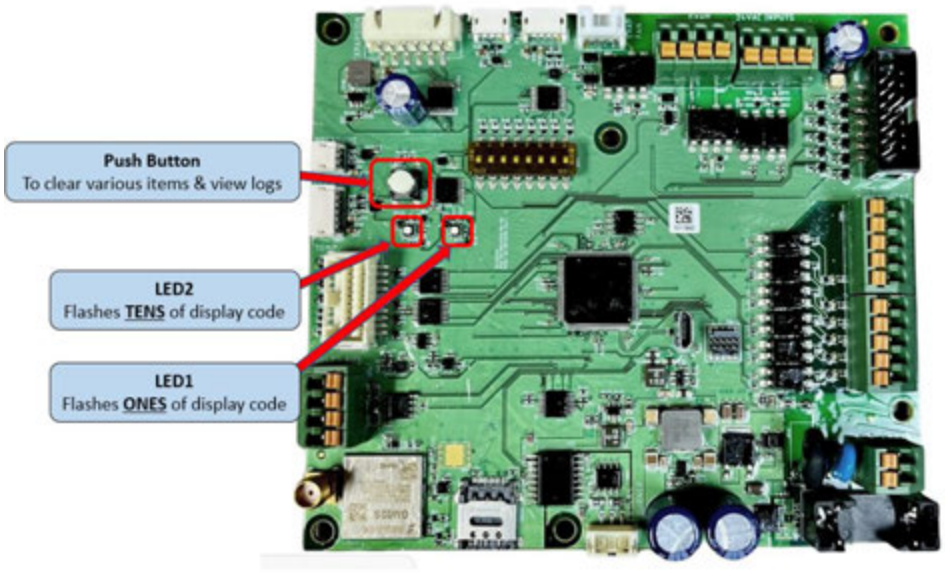

Figure B1: GAHP Control Board LED Display & Push Button

B3 Push Button Logic

B3.1 Display GAHP Control Board Error Log

Press button once.

Errors displayed with a 2 second pause between entries.
Displays errors with amber color.
Once all entries have been displayed, both LEDs flash twice fast (red), then LEDs return to normal operation.

B3.2 Display Combustion Control Board Error Log

Press – Hold for 3 seconds.

Errors displayed with a 2 second pause between entries.

Displays errors with amber color.

Once all entries have been displayed, both LEDs flash twice fast (red), then LEDs return to normal operation.

B3.3 Clear Current Errors & Timers for Both Control Boards

Press – Release

Press – Release

Press – Hold for 5 seconds

LEDs will flash pattern below once reset complete (@ normal flash rate):

LED1: amber LED2: off

LED1: off LED2: amber

Repeat 2 times (total 3 cycles)

B3.4 Disable / Re-Enable GAHP

In some scenarios it may be beneficial to temporarily disable the GAHP. When this is done, the GAHP will remain locked out regardless of whether a heating call is received. This can be beneficial when checking electrical connections, but the GHP needs to remain idle.

Press – Release (repeat 6 times)

LEDs will flash pattern below once complete:

When GAHP **Disabled**:

LEDs – amber, code 14 (lockout)

When GAHP **Re-Enabled**:

LEDs – green, code 11 (idle)

NOTE: Wait at least 5 Minutes before trying to restart the unit. This is to prevent short cycling.

B4 GAHP Status Codes

Flash Code	LED1	LED2	Code Type	Lockout Time	Description
11	Green	Green	Status	N/A	**Control is IDLE**
12	Green	Green	Status	N/A	**Startup**
13	Green	Green	Status	N/A	**GAHP Running**
14	Green	Green	Status	N/A	**Shutdown**

B5 GAHP Control Board WARNING Codes

Flash Code	LED1	LED2	Code Type	Lockout Time	Description
14	Amber	Amber	Warning	N/A	**Manual Lockout (GAHP Disabled)**
21	Amber	Amber	Warning	N/A	**Ambient Temperature Sensor** Fault
22	Amber	Amber	Warning	N/A	**Hydronic Return Temperature Sensor** Fault
23	Amber	Amber	Warning	N/A	**Hydronic Supply Temperature Sensor** Fault
24	Amber	Amber	Warning	N/A	**Evaporator Inlet Temperature Sensor** Fault
25	Amber	Amber	Warning	N/A	**Evaporator Outlet Temperature Sensor** Fault
26	Amber	Amber	Warning	N/A	**Spare Temp Sensor** Fault
27	Amber	Amber	Warning	N/A	**Mid Tank Temperature Sensor** Fault
31	Amber	Amber	Warning	N/A	**Pressure Sensor** Fault
32	Amber	Amber	Warning	N/A	**Desorber Temperature Sensor** Fault
33	Amber	Amber	Warning	N/A	**Pump Speed Sensor** Solution pump rpm when relay de-energized
34	Amber	Amber	Warning	N/A	**Pump Speed Sensor** Solution pump rpm low
35	Amber	Amber	Warning	N/A	**AHU Comm Lost** Communication with AHU lost after being established
36	Amber	Amber	Warning	N/A	**Loss of Flame** Combustion control has sensed a flame loss (unit attempting to relight)
37	Amber	Amber	Warning	N/A	**Remote Comm Lost** Communication with remote server lost after being established
41	Amber	Amber	Warning	N/A	**Combustion Control Comm Lost**
42	Amber	Amber	Warning	N/A	**Combustion Control (11) - Flame outside of normal operations**
43	Amber	Amber	Warning	N/A	**Combustion Control (12) - Number of ignition attempts exceeds limit**

44	Amber	Amber	Warning	N/A	**Combustion Control (14) - Gas valve or gas valve relay is shorted to 24Vac**
45	Amber	Amber	Warning	N/A	**Combustion Control (15) - Gas valve incorrect state**
46	Amber	Amber	Warning	N/A	**Combustion Control (41) - Air pressure low switch closed when inducer is off**
47	Amber	Amber	Warning	N/A	**Combustion Control (42) - Blower is rotating when it should be off**
48	Amber	Amber	Warning	N/A	**Combustion Control (43) - Air pressure low switch open when it should be closed**
49	Amber	Amber	Warning	N/A	**Combustion Control (44) - Blower is not rotating when it should be on**
51	Amber	Amber	Warning	N/A	**Combustion Control (45) - Fuse is open**
52	Amber	Amber	Warning	N/A	**Combustion Control (52) - Safe startup failure**
53	Amber	Amber	Warning	N/A	**Combustion Control (54) - ID plug failure**
54	Amber	Amber	Warning	N/A	**Combustion Control (55) - General control board failure**
55	Amber	Amber	Warning	N/A	**Hall Sensor Failure**
61	Amber	Amber	Warning	N/A	**Evaporator Outlet Sensor – Potential Failure**

B6 GAHP Control Board ERROR (LOCKOUT) Codes

Flash Code	LED1	LED2	Code Type	Lockout Time	Description
11	Red	Red	Hard Lockout	∞	**Desorber Over-Temperature Switch** open
12	Red	Red	Soft Lockout	30 minutes	**Desorber Temperature Sensor** above recovery limit for > 15 minutes
13	Red	Red	Soft Lockout	30 minutes	**Desorber Temperature Sensor** lower limit exceeded 3 times
14	Red	Red	Hard Lockout	∞	**Desorber Temperature Sensor** upper limit exceeded 3 times
15	Red	Red	Hard Lockout	∞	**High-Side Over-Pressure Switch** open
16	Red	Red	Soft Lockout	10 minutes	**High Side Pressure** exceeds limit
17	Red	Red	Soft Lockout	10 minutes	**Hydronic Return Water Temperature** exceeds limit
18	Red	Red	Soft Lockout	30 minutes	**Desorber Temperature Sensor** temperature over limit and has not reduced within required time frame
19	Red	Red	Hard Lockout	∞	**Desorber Temperature Sensor** maximum temperature limit exceeded
21	Red	Red	Soft Lockout	5 minutes	**Hydronic Flow Meter** below limit while hydronic pump is energized
25	Red	Red	Soft Lockout	10 minutes	**Pump Speed Sensor** Pump speed below lower limit
26	Red	Red	Hard Lockout	30 minutes	**Pump Speed Sensor** Pump not turning (possible pump drive failure)
31	Red	Red	Soft Lockout	30 Seconds	**Hydronic Return & Supply Temperature Sensors** Fault
32	Red	Red	Soft Lockout	30 Seconds	**Evaporator Inlet & Ambient (or Evaporator Outlet) Temperature Sensors** Fault
33	Red	Red	Soft Lockout	1 hour	**Combustion Controller in Lockout**
34	Red	Red	Hard Lockout	∞	**Desorber Overheat** Max Attempts Exceeded
35	Red	Red	Hard Lockout	∞	**Pump Drive Failure**

Note: The Combustion Controller will automatically reset and clear its errors after 1 hour.

Appendix C Electrical Diagram

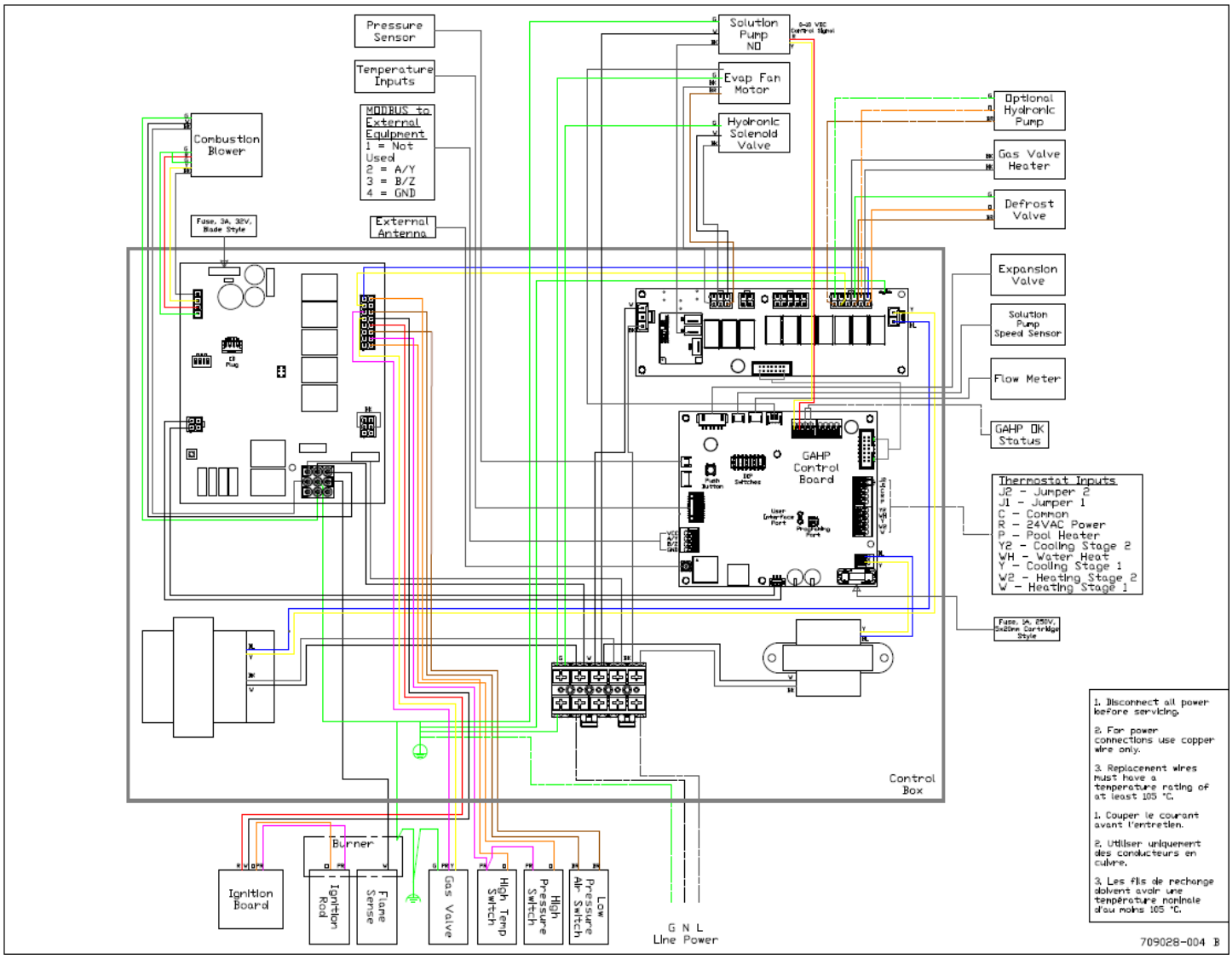

Appendix D Hydronic Equivalent Resistant Calculation

The hydronic flow rate is crucial for ANESI's GAHP to provide the best performance possible. The available head will depend on the equipment installed, the length and size of lines, fittings, etc.

Before the total hydronic resistance of a piping circuit can be found, the individual hydraulic resistances of all fittings, valves, or other components must be determined. One approach is to consider each fitting, valve, or other device as an equivalent length of copper tube of the same pipe size. By using the equivalent length of piping for all components in the circuit, the circuit can be treated as if it were a single piece of pipe having a length equal to the sum of the actual pipe length, equipment, total equivalent lengths of all fittings, valves, or other devices.

Below are the steps for determining the hydronic head loss and expected flow rate specific to the installation (once a sketch of the expected plumbing for the loop has been drawn):

STEP 1: Equipment Head Loss
STEP 2: Fittings Equivalent Loss
STEP 3: Line Head Loss
STEP 4: Calculate
STEP 5: Reevaluate

WARNING: Not completing this calculation correctly can result in added cost and installation issues. It is up to the contractor/installer to properly plan the installation site.

STEP 1: Equipment Head Loss

Refer to the hydronic pressure drop called out in Section 1.5 for the GAHP.

Refer to the manufacturer's specified pressure drop for the coil inside the indirect storage tank.

For any other components or appliances connected in line with the GAHP (purge & fill valves or air vents), find the manufacturer's pressure drop and include that in your calculations for the total head loss.

STEP 2: Fittings Equivalent Loss

Add up the total equivalent head loss for all fittings, valves, and additional equipment to be installed in the loop.

Below is a chart providing some average pressure drops of common fitting types that can be used as a guide. However, the following equivalent lengths are generalizations and not brand specific; for detailed information please see the manufacturer of the fitting that will be used in the actual installation. Additionally, the following is only a guide for expected values and therefore should be used with appropriate consideration.

Equivalent Length of Straight Pipe for Valves and Fittings (feet)			
Threaded (PEX) Fittings		Pipe Size (inches)	
		3/4	1
Elbows	Regular 90 deg	4.4	5.2
	Long radius 90 deg	2.3	2.7
	Regular 45 deg	0.9	1.3
Tees	Line flow	2.4	3.2
	Branch flow	5.3	6.6
Return Bends	Regular 180 deg	4.4	5.2
Valves	Ball (Full Port)	0.2	0.3
	Ball (Reduced Port)	22	27
	Globe	24	29
	Gate	0.7	0.8
	Angle	15	17
	Swing Check	8.8	11
Strainer		6.6	7.7

** Based on Schedule 40 Steel Pipe*

Figure D1: Equivalent Length for Valves & Fittings – Threaded (PEX)

Equivalent Length of Straight Pipe for Valves and Fittings (feet)			
Copper Soldered Fittings		Pipe Size (inches)	
		3/4	1
Elbows	Regular 90 deg	1.6	2.5
	Long radius 90 deg	1.4	1.0
	Regular 45 deg	0.5	1.0
Tees	Line flow	0.5	0.5
	Branch flow	3.0	4.5
Valves	Ball (Full Port)	0.5	0.5
	Swing Check	3	4.5

** Based on Copper Tube*

Figure D2: Equivalent Length for Valves & Fittings – Copper (Soldered)

STEP 3: Line Head Loss

The total length for each piping run will need to be totaled and converted into head/pressure losses.

Below is a chart providing some average equivalent lengths of Type L Copper and PEX lines that can be used as a guide. However, the following equivalent lengths are generalizations and not brand specific; for detailed information please see the manufacturer of the lines that will be used in the actual installation.

Average Pressure (Head) Loss *values based upon 40% PG at **8.5 GPM**, 70 °F fluid*			
Line Material	Pipe Size (inches)		UNITS
	3/4	1	
Type L Copper Lines	0.09	0.03	PSI/FT
	0.20	0.07	FT_{H2O}/FT
	0.60	0.2	kPa/FT
PEX	0.18	0.07	PSI/FT
	0.42	0.16	FT_{H2O}/FT
	1.24	0.5	kPa/FT
Schedule 40 Steel Pipe **(USE THIS for converting equivalent length of FITTINGS)**	0.10	0.03	PSI/FT
	0.24	0.07	FT_{H2O}/FT
	0.71	0.2	kPa/FT

Average Pressure (Head) Loss *values based upon 40% PG at **4.3 GPM**, 70 °F fluid*			
Line Material	Pipe Size (inches)		UNITS
	3/4	1	
Type L Copper Lines	0.02	0.01	PSI/FT
	0.06	0.02	FT_{H2O}/FT
	0.17	0.05	kPa/FT
PEX	0.05	0.01	PSI/FT
	0.12	0.03	FT_{H2O}/FT
	0.35	0.10	kPa/FT
Schedule 40 Steel Pipe **(USE THIS for converting equivalent length of FITTINGS)**	0.03	0.01	PSI/FT
	0.06	0.02	FT_{H2O}/FT
	0.19	0.05	kPa/FT

Figure D3: Average Pressure (Head) Loss

STEP 4: Calculate

Taking the values determined in the previous steps, use the following equation:

TOTAL HEAD LOSS = (Equipment Head Loss STEP 1) + (Fittings Equivalent Loss STEP 2) + (Line Head Loss STEP 3)

EXAMPLE:

			Equivalent Length (ft)		
Component	Quantity	Length (ft)	Individual	Total	Head Loss (PSI)
GAHP	1	--	--	--	6
IST	1	--	--	--	3
Elbows (1 inch, Regular 90°)	6	--	5.2	31.2	1.9
Ball Valve (1 inch, Full Port)	2	--	0.3	0.6	0.04
Tees (1 inch, Line flow)	2	--	3.2	6.4	0.4
Strainer (1 inch)	1	--	7.7	7.7	0.5
PEX (1 inch)		60	60	60	4.2
				TOTAL:	16.0

As seen in the table above, if 60 feet of 1-inch PEX was used with the other various components listed the total pressure drop would be 16 psi. Therefore, a hydronic pump for an 80k system would need to be sized to maintain 8.5 gpm at 16 psi (37 ft_{H2O}).

Appendix E Installation Checklist

These guidelines are provided to ensure the successful commissioning of the Anesi gas absorption heat pump (GAHP) with the Anesi air handler unit (AHU) and the optional indirect storage tank (IST). They assume that the installation contractor or professional has read and understood the installation and operation manuals, including all minimum and maximum guidelines for all Anesi products.

System Details				**Date:**
Location Address				
GAHP Model		GAHP S/N		IMEI:
AHU Model		AHU S/N		
IST Model		IST S/N		
Contractor Company				
Contractor Name			Mobile #	

GAHP			
	Placement and Installation		***Condensate Disposal***
☐	Installation on a flat and level (within 2°) surface	☐	Condensate management is functional
☐	Clearance requirements are met for unit and flue pipe	☐	Self-regulating heat trace installed and functioning
☐	Visual confirmation of clean installation: nothing disconnected or damaged	☐	Photo collected for commissioning team
☐	Proper installation of flue pipe and external antenna		
☐	Photo collected for commissioning team		
	Hydronic Lines		***Electric Service***
☐	All hydronic line isolation valves are open	☐	120VAC circuit is hot
☐	All outdoor hydronic lines are insulated with minimum R-8 insulation	☐	120VAC polarity is correct
☐	Photo collected for commissioning team	☐	Low voltage wires are routed separately from line voltage wires
		☐	Control wiring is correctly installed in the control box*
		☐	Photos collected for commissioning team: internal unit and external connections

** Refer to Appendix A within the installation and operation manual*

	Fuel Service
☐	Manual shut-off valve installed upstream of required drip tee
☐	Line purged of air
☐	Photo collected for commissioning team

AHU			
Placement and Installation		***Hydronic Lines***	
☐	Access clearance requirements are met	☐	All hydronic lines connected and without leaks
☐	Visual confirmation of clean installation: nothing damaged	☐	All indoor hydronic lines are insulated with minimum R-4 insulation
☐	Duct work is sealed and without leaks	☐	Glycol level in plastic feeder tank AND expansion tank are FULL
☐	Filter is installed	☐	Check valve between plastic feeder tank and expansion tank installed and in correct orientation
☐	Photo collected for commissioning team	☐	Photo collected for commissioning team
		☐	All hydronic lines filled and purged, including lines to and from the IST when applicable
		☐	Inhibited Propylene Glycol Brand
		☐	Inhibited Propylene Glycol % Measured

	Electric Service							
☐	120VAC installed per local code and is hot	☐	Photos collected for commissioning team					
☐	Control wiring is correctly installed in the control box^							
	☐	Thermostat Signals (R, C, W1, W2, G, Y1, Y2)	☐	Aquastat Signal	☐	Modbus (3-wire, CAT5 cable)	☐	(Low) Tank Temperature

^ *If applicable*

Running the System		***IST (if applicable)***	
☐	Connect and confirm remote access software functionality	☐	Confirm water fill level
		☐	Valves: hot water is closed AND cold-water inlet valve is open
		☐	Expansion tank connected
		☐	Disconnect control wire from IST water heater Aquastat
Entire system			
☐	Set space-heating thermostat to initiate a space-heating call (Stage 1)	☐	Confirm blower initiation in AHU at hydronic supply temperature of 90°F (32.2 °C)
☐	Confirm burner lights in GAHP	☐	Confirm no leaks within the flue transition of the GAHP while unit is in operation

	System Readings		
	Using an industry-standard combustion analyzer, measure combustion emissions at the flue gas vent based on full/min fire rates (refer to Section 2.10 for firing rate values)^^:		
		Full Fire	**Min Fire**
☐	Oxygen (%)		
☐	Carbon Dioxide (%)		
☐	Excess Air (%)		
☐	Carbon Monoxide (ppm)		
☐	Calculate firing rate based on local barometric pressure and an HHV(_____):		

	System Readings using ANESI App				
	Collect the following data points after adjusting the firing rates with the ANESI App				
	Full Fire (Btu/hr)			**Min Fire (Btu/hr)**	
☐	Final firing rate measured		☐	Final firing rate measured	
☐	Percentage to achieve		☐	Percentage to achieve	

	Entire System
☐	Reconnect control wire from the IST water heater Aquastat and a tank call will be initiated IF the space heating call from the thermostat is not stage 2 (W2)
☐	Verify the hydronic 3-way valve in the AHU is open and flow is active through the indirect coil, i.e., supply line feeding tank is warm
☐	Verify the AHU switches back to space heating (if a call is still present) after the IST Aquastat is satisfied
☐	Open the domestic hot water valve once the IST is fully heated

^^*Altitude and propane fuel scenarios require alternate acceptable reference ranges. Refer to Section 2.10 of the manual.*

Appendix F ANESI App Guidance

The ANESI App is webpage based and may be accessed by either scanning the QR code on the serial plate attached to the side of the unit or from a link on the ANESI website.

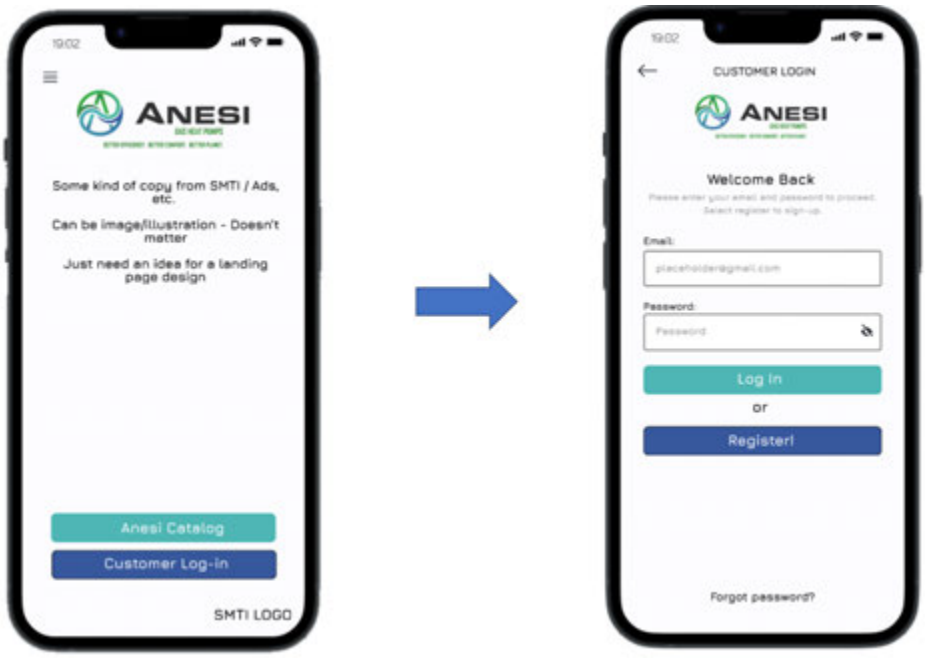

Figure E1: Landing Page & Login

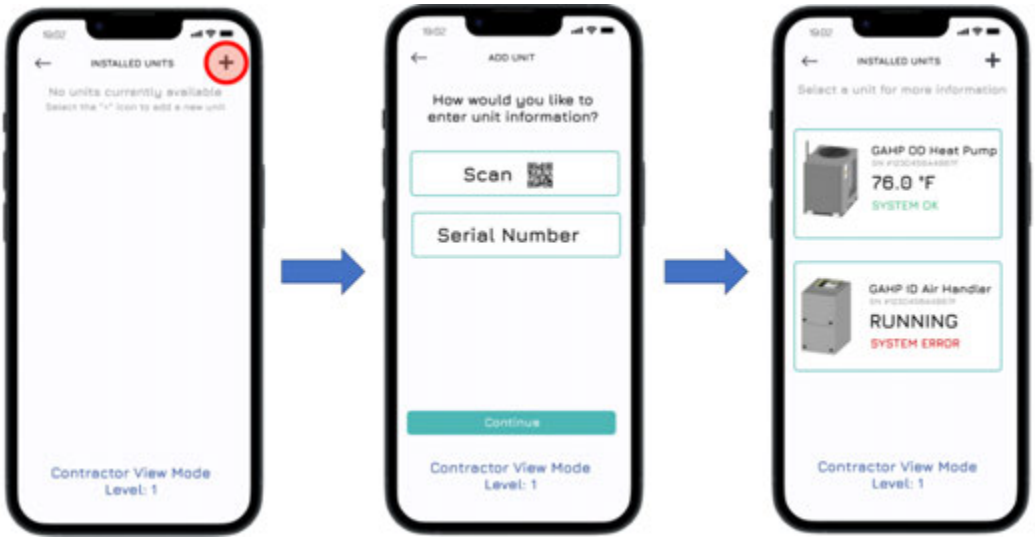

Figure E2: Adding a Unit

Once logged in, the contractor may add (commission) a new unit by selecting the "+" icon in the upper right corner of their "Installed Units" screen. The app will guide the contractor through a commissioning checklist after either scanning the QR code or manually entering the serial number.

To monitor unit temperatures, flow rate, the current mode of operation, thermostat inputs, and adjust the firing rate select the unit from the “Installed Units” page.

To adjust firing rate (per steps 1 & 3 from Section 2.10.2) the contractor must follow steps outlined in the steps and Figure E3 below:

1. Select the relay next to “Set Firing Rate” to Enable manual control.
2. Type in the percentage outlined in Section 2.10.2 Step 1.
3. Select “Set” to send the value to the GAHP-OD control board. Monitor the readings with the flue gas analyzer & make adjustments as needed.
4. Once complete, repeat steps 2 & 3 with the percentage outlined in Step 2 of Section 2.10.2.
    a. To complete Steps 7 – 9 in Section 2.10.2 continue using the manual firing rate control to adjust the firing rate percentage until the minimum & maximum firing rates are within the target range.
5. Once manual adjustment of the firing rate is no longer needed de-select the relay from Step 1 to return the unit to automatic control.
6. Lastly, to **permanently set** the required final firing rate percentages found from Steps 7-9 of Section 2.10.2 Select the relay next to “Set Final Firing Rates”.
7. Type in the percentages into the “Min” & “Max” boxes.
8. Select “Set” to send these values to the GAHP-OD control board.
9. De-select the relay from Step 6.

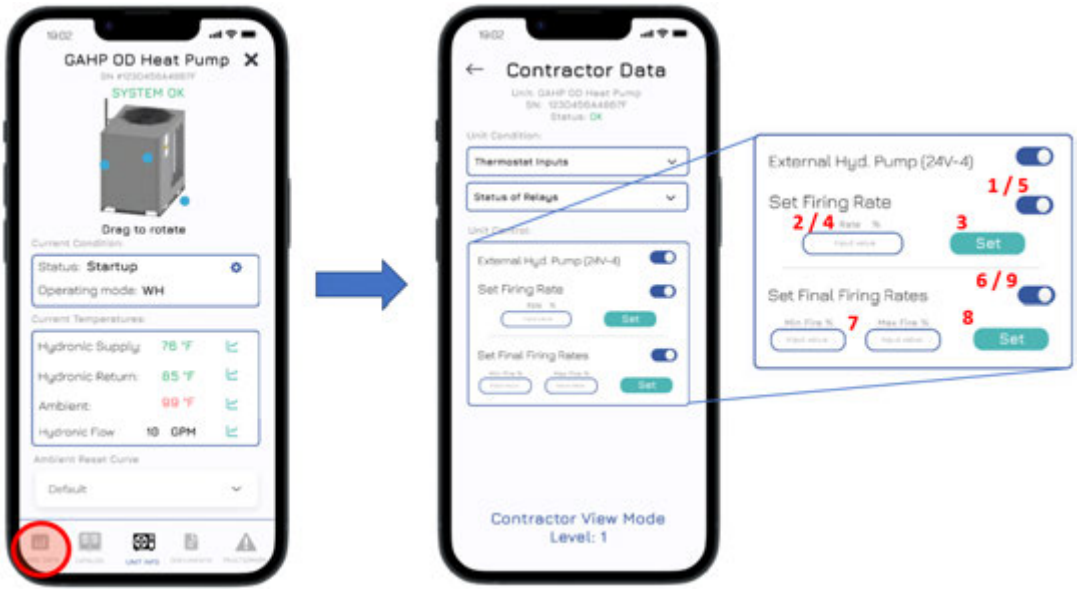

Figure E3: Adjusting Firing Rate

Appendix G Indoor Heat Exchanger Specifications (Commercial Applications)

G1 Commercial Applications

Indirect Storage Tank:

- Minimum Volume: 100 gallons (379 L)
- Dip Tube for domestic cold water in
- Minimum Heat Exchanger Surface Area: 30 sq. ft.
- NOTE: Entirety of coil should be located below mid tank.
- Aquastat and/or Thermistor Location: Middle of tank

Plate Heat Exchanger Sizing:

- Connections: minimum size 3/4" NPT (Male or Female) to match hydronic lines
- Load: 40,000 Btu/hr (11.7 kW)
- LMTD: target 6 °F (3 °C)
- Max Pressure Drop (either side): 2.0 psid (13.7 kPa)

Hot Side:

- Fluid: Propylene Glycol (40%, but varies based on location)
- Flow: 4.3 gpm (16 Lpm)
- T_{in}: 140 °F (60 °C)

Cold Side:

- Fluid: Water
- Flow: Minimum 3 gpm (11 Lpm)
- T_{in}: 110 °F (43 °C)

Storage Tank (If a PHX is used):

- Minimum Volume: 100 gallons (379 L)
- Dip Tube for domestic cold water in
- Return (cold) water back to PHX must come from bottom of tank.
- Supply (hot) water from PHX must empty into the middle of the tank.
- A distribution tube of some kind should be used to prevent mixing.
- Aquastat and/or Thermistor Location: Middle of tank

G2 Residential Applications

Indirect Storage Tank:

- Minimum Volume: 80 gallons (303 L)
- Dip Tube for domestic cold water in
- Minimum Heat Exchanger Surface Area: 20 sq. ft.
- NOTE: Entirety of coil should be located below mid tank.
- Aquastat Location: Middle of tank
- Thermistor Location: Low tank (lower 20% of total storage volume)
    - Recommended for COMBI operation.

Plate Heat Exchanger Sizing:

- Connections: minimum size 3/4" NPT (Male or Female) to match hydronic lines
- Load: 40,000 Btu/hr (11.7 kW)
- LMTD: target 6 °F (3 °C)
- Max Pressure Drop (either side): 2.0 psid (13.7 kPa)

Hot Side:

- Fluid: Propylene Glycol (40%, but varies based on location)
- Flow: 4.5 gpm (17 Lpm)
- T_{in}: 140 °F (60 °C)

Cold Side:

- Fluid: Water
- Flow: Minimum 4.5 gpm (17 Lpm)
- T_{in}: 120 °F (43 °C)

Storage Tank (If a PHX is used):

- Minimum Volume: 80 gallons (303 L)
- Dip Tube for domestic cold water in
- Return (cold) water back to PHX must come from bottom of tank.
- Supply (hot) water from PHX must empty into the middle of the tank.
- A distribution tube of some kind should be used to prevent mixing.
- Aquastat Location: Middle of tank
- Thermistor Location: Low tank (lower 20% of total storage volume)
    - Recommended for COMBI operation.

Appendix H GAHP Center of Gravity

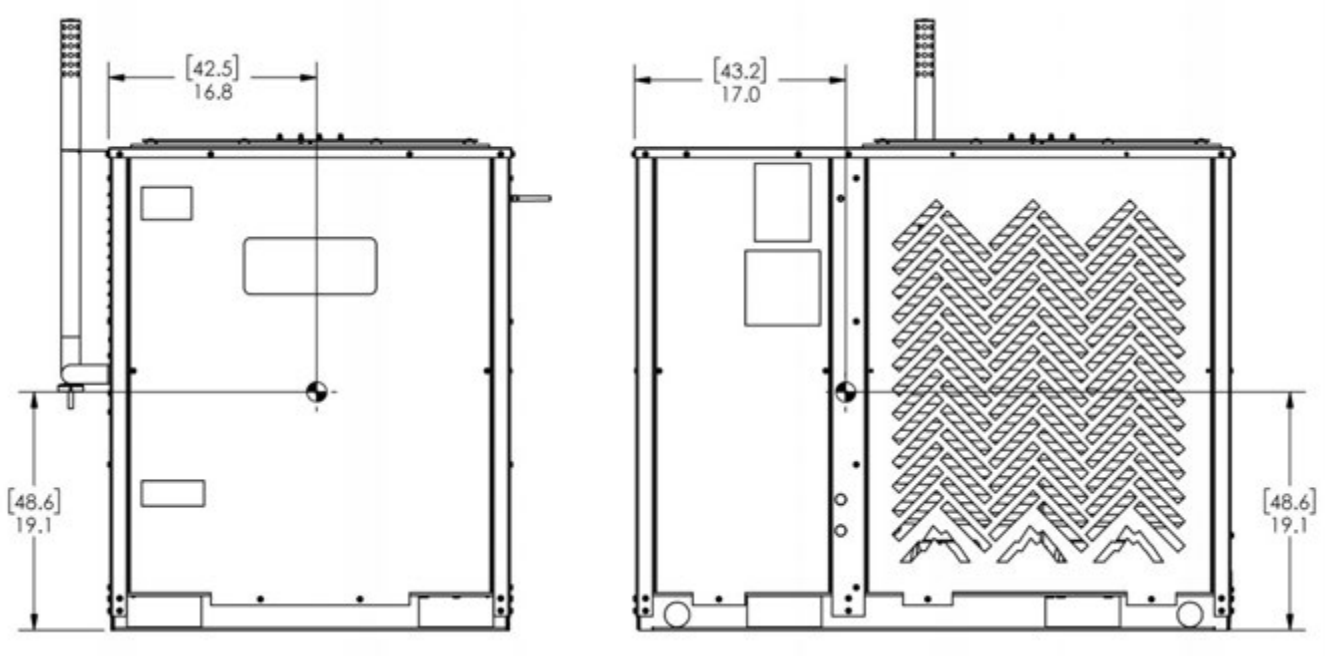

Figure H1: GAHP Center of Gravity (CoG)