ANESI®

A BECKETT COMMERCIAL SOLUTIONS COMPANY

Installation and Operation Manual

Hydronic Air Handling Unit

Model: A0802WAVXX
Up-Flow / Vertical Orientation
Heating Only

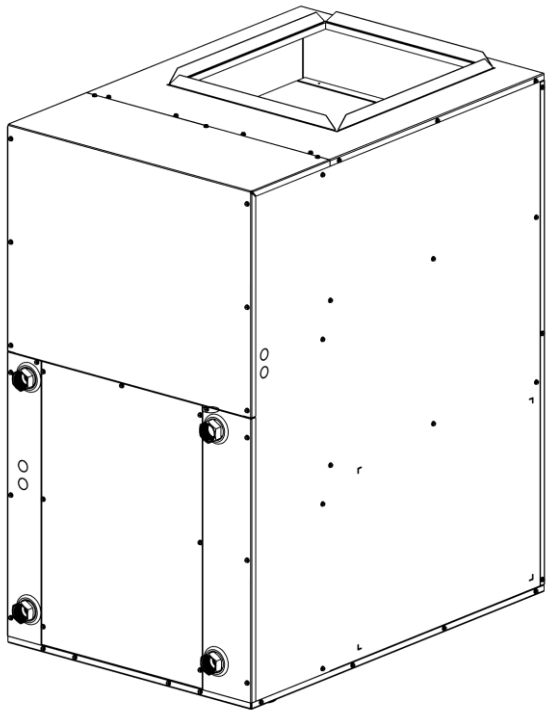

Foreword

This installation & maintenance manual for the Beckett Commercial Solutions (ANESI) Hydronic Air Handling Unit (AHU) model A0802WAVXX is to be used by HVAC, plumbing, and electrical installers to ensure proper installation.

For your safety, read and follow all information within this manual before installation and operation of the AHU.

Installation and service must be performed by a qualified installer or service agency and must comply with all national and local Installation Codes and Standards, including:

General Installation
Installation of Air Conditioning and Ventilating Systems NFPA 90B (latest edition)

UL 60335-2-40: Household and Similar Electrical Appliances – Heat Pumps, Air-Conditioners and Dehumidifiers

Electrical Power/Wiring:
National Electrical Code, ANSI/NFPA No. 70 or CSA Standard C22.1, as applicable

Plumbing Systems:
ICC International Plumbing Code (IPC); Uniform Mechanical Code (UMC); Uniform Plumbing Code (UPC)

IAPMO/ANSI H1001.1-2021, Standard for Quality of Heat Transfer Fluids Used in Hydronics Systems

Duct Systems
Sheet Metal and Air Conditioning Contractors National Association (SMACNA)

American Society of Heating, Refrigeration & Air Conditioning Engineers (ASHRAE)

2001 Fundamentals Handbook Chapter 34 or 2000 HVAC Systems & Equipment Handbook Chapters 9 & 16

Air Conditioning Contractors Association (ACCA) Manual D

Acoustical Lining and Fibrous Glass Duct
Current edition of SMACNA; NFPA 90B as tested by UL Standard 181 for Class 1 Rigid Air Ducts

Abbreviations			
AHU	*Air Handling Unit*	IST	*Indirect Storage Tank*
GAHP	*Gas Absorption Heat Pump*	ST	*Storage Tank*
SH	*Space Heat (or) Space Heating*	DW	*Double Wall*
WH	*Water Heat (or) Water Heating*	PHX	*Plate Heat Exchanger*
DHW	*Domestic Hot Water*	HX	*Heat Exchanger*

Table of Contents

1 Overview & Technical Specifications 5
1.1 **Safety Symbols** 5
1.2 **Safety Precautions** 5
1.3 **Overall Description of the AHU** 6
1.4 **Applications** 7
1.4.1 Residential Forced-Air 7
1.4.2 Space Heating with Domestic Hot Water (COMBI) 7
1.5 **Components** 8
1.6 **Technical Data** 9
1.7 **AHU Dimensions** 11
2 Installation 12
2.1 General Information 12
2.2 Positioning the AHU 13
2.2.1 Site Preparations 13
2.2.2 Configuration and Orientation 13
2.2.3 Clearances 13
2.2.4 Adding an Air-Conditioning Coil 14
2.3 Hydronic Plumbing 14
2.3.1 Plumbing Requirements 14
2.3.2 Expansion Tank 15
2.3.3 Reserve Tank 15
2.3.4 Pressure Relief Valve (NOT included in AHU) 15
2.3.5 Hydronic Equivalent Flow Resistance Calculations 15
2.3.6 Booster Pump Requirements 19
2.3.7 Connecting Hydronics to Heat Source 20
2.3.8 Connecting Optional Domestic Hot Water Heating 20
2.4 Connecting the Ductwork 21
2.4.1 Ducting Requirements 21
2.4.2 Ductwork Installation 21
2.5 Thermostat Recommendations & Settings 22
2.6 Electrical Connections 22
2.6.1 Electrical Requirements 22
2.6.2 Primary Power 23
2.6.3 Control Wiring: Space Heating Thermostat to AHU 24
2.6.4 Control Wiring: AHU to GAHP or Heating Appliance 24
2.6.5 (Optional) Control Wiring: AHU to IST 25
2.7 IOT Connection 25
2.8 Hydronic System Filling 26
2.8.1 Mixing glycol 26
2.8.2 Filling The Hydronic System 26
2.9 Hydronic Flow Rate Adjustment 29
2.9.1 Flow verification 29
2.10 Blower Speed Adjustment 30
2.11 Installation & Regular Inspection 30
3 Operation 30
3.1 Heating / Cooling Modes 30
3.1.1 Space Heating 30
3.1.2 Water Heating 30
3.1.3 Combi Heating (Space Heating + Water Heating) 31
3.1.4 "Overshoot" Mode (Space Heating) 31
3.1.5 "AHU Decay" Mode 31
3.1.6 "Water Heat Top-Off" Mode 31
3.1.7 "Setback Recovery" Mode 31
3.1.8 Space Cooling 31

3.1.9 Electric Heat Pump Space Heating 31
3.1.10 Combi Hybrid (Electric Space Cooling or Heating + Water Heating) 32
3.1.11 Fan Only 32
4 Monitoring & Safety 32
4.1 Sensors / Switches 32
5 Maintenance 33
5.1 Air Filter 33
5.2 Blower 33
5.3 Hydronic Coil 33
5.4 Strainer 33
5.5 Checking Glycol Levels 33
5.6 Hydronic Pump 34
5.7 Checking the Error Log 34
6 Troubleshooting 34
6.1 Definitions 34
6.2 Diagnostic LEDs 35
6.2.1 LED Colors 35
6.2.2 Flash Code Logic 35
6.3 Push Button Logic 35
6.3.1 The WHITE Push Button 35
6.3.2 The BLACK Push Button 36
6.4 Troubleshooting Guidance 36
7 Replacement Parts 37
Appendix 38
Appendix A Control Box Layout, Fuse, & Relay Specifications 38
Appendix B Electrical Diagram 42
Appendix C Status & Fault Codes 43
Appendix D Installation Checklists 44
Appendix E ANESI Webpage-based APP Guidance 46
Appendix F Indoor Heat Exchanger Specifications 48

1 Overview & Technical Specifications

1.1 Safety Symbols

This manual contains the following important safety symbols. Always read and obey all safety instructions.

DANGER

Indicates an imminently hazardous situation which, if not avoided, will result in serious injury or death.

WARNING

Indicates a potentially hazardous situation which, if not avoided, could result in serious injury or death.

CAUTION

Indicates a potentially hazardous situation which, if not avoided, could result in minor or moderate injury or property damage.

1.2 Safety Precautions

WARNING

This product can expose you to chemicals including lead and lead compounds which are known to the State of California to cause cancer and birth defects or other reproductive harm. For more information, go to www.P65Warnings.ca.gov.

The following precautions apply to the installer and service technicians. Read and follow all instructions in this section.

- Read these installation instructions carefully and adhere to all warning and caution statements. Follow all local building codes and national codes as applicable.

WARNING

Disconnect power and allow hydronic fluid to cool before servicing.

- Do not use an extension cord or socket plug with this AHU, it must be connected to power with fixed wiring only.
- Fixed wiring must include a means of disconnection such as a circuit breaker. Local codes may require the use of arc-fault circuit interrupters or ground-fault circuit interrupters.
- Only use replacement parts approved by Beckett Commercial Solutions.
- Any modification to the AHU except as described in this manual can be dangerous and will void the warranty.

WARNING

RISK OF ELECTRICAL SHOCK. CAN CAUSE INJURY OR DEATH: System contains oversized protective earthing (grounding) terminal which shall be properly connected. Grounding conductor must be 12 AWG minimum.

- This AHU must be located in a space where the ambient temperature remains between 32 °F (0 °C) and 130 °F (38 °C) with a maximum relative humidity of 95%. It should be located in a way that piping or other permanently installed fixtures do not have to be removed for servicing.
- The appliance is not to be used by persons (including children) with reduced physical, sensory, or mental capabilities, or lack of experience and knowledge, unless they have been given supervision or instruction.

CAUTION

Do not connect the AHU directly to the domestic potable water system. A heat exchanger must be used with the domestic hot water feature.

WARNING

If this product is connected to a heat source other than an ANESI heat pump, a pressure relief valve must be installed in the hydronic system that opens at 60 psig (414 kPa) max.

WARNING

Do not use this appliance if any part has been under water. Immediately call a qualified service technician to inspect the appliance and to replace any part of the control system and any gas control which has been under water.

CAUTION

Do not allow children to play on or with this appliance. While it is certified to the applicable safety standards, it is not a toy.

1.3 Overall Description of the AHU

The ANESI AHU is designed to work with the ANESI gas heat pump to achieve optimal performance and efficiency. This integration includes several custom operating parameters in the control software. Performance of the AHU cannot be guaranteed with other hydronic heating appliances, including boilers. Anyone using this product with other heat sources assumes the responsibility to ensure a safe and efficient system.

When paired with an ANESI gas heat pump, the AHU functions as the control center for the home heating system. It relays the thermostat signals to the gas heat pump and any add-on air conditioning system, and it manages the heat delivery to forced air space heating and optional domestic hot water heating.

The AHU is designed to make installation quick and easy. Most of the components that would normally be required in a hydronic heating system are incorporated into the AHU. The installer only needs to plumb the hydronic lines from the AHU to the heat source and run the power and control wiring.

1.4 Applications

1.4.1 Residential Forced-Air

The AHU can operate as a standalone forced air hydronic heating system for residential structures. In this configuration, the AHU circulates warm hydronic fluid through the water-to-air coil and heats the living space. The AHU operates in this configuration automatically when the domestic hot water control wiring is not connected.

1.4.2 Space Heating with Domestic Hot Water (COMBI)

If the homeowner would like to add domestic hot water heating to the system this can be accomplished by adding a set of hydronic lines & control wiring to an indirect storage tank (or a PHX & storage tank). When operating in COMBI mode the indoor AHU controls will switch back and forth between space and water heating *but will not do both simultaneously*. The controls inside ANESI's custom AHU have been optimized to monitor both time and temperature in each mode to ensure the homeowner retains comfortable indoor and domestic hot water temperatures.

For COMBI installations where an ANESI GAHP is used as the heating source Figure 1 may be used as an installation schematic.

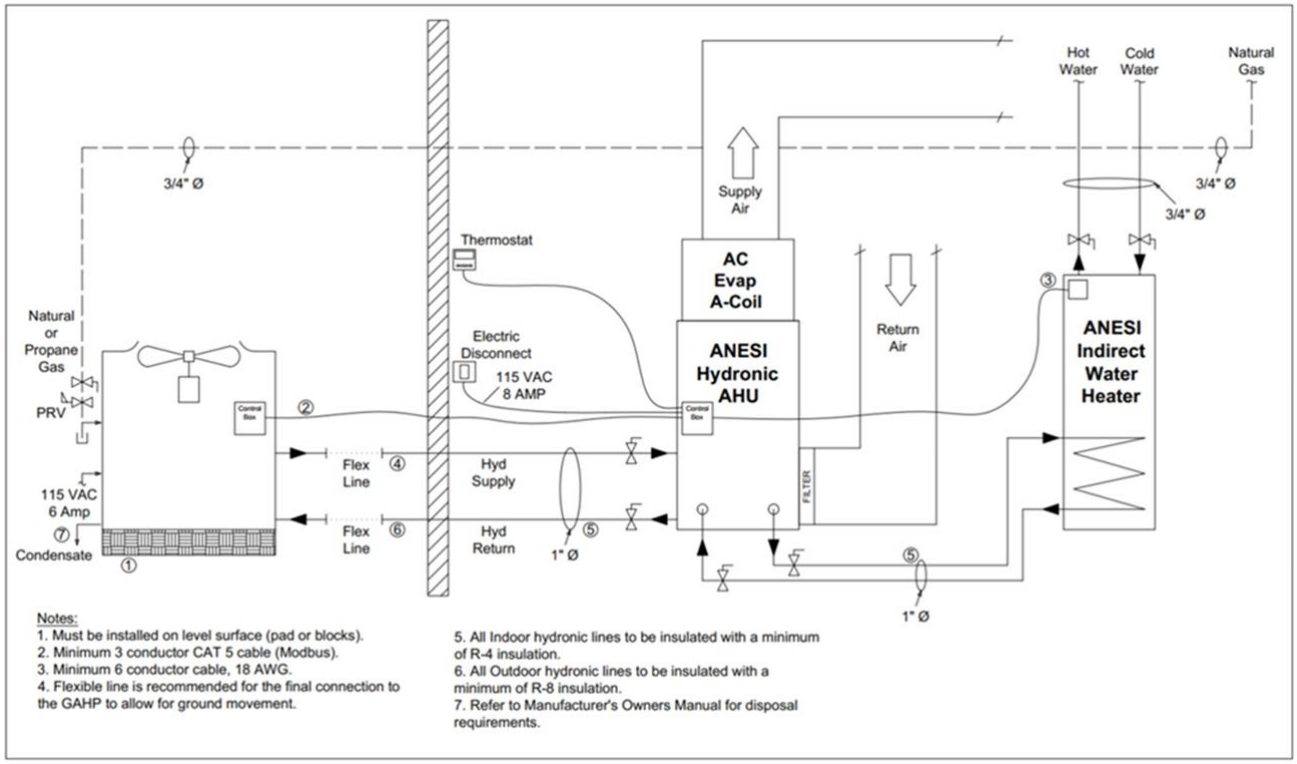

Figure 1: COMBI Installation w/ a GAHP & IST

1.5 Components

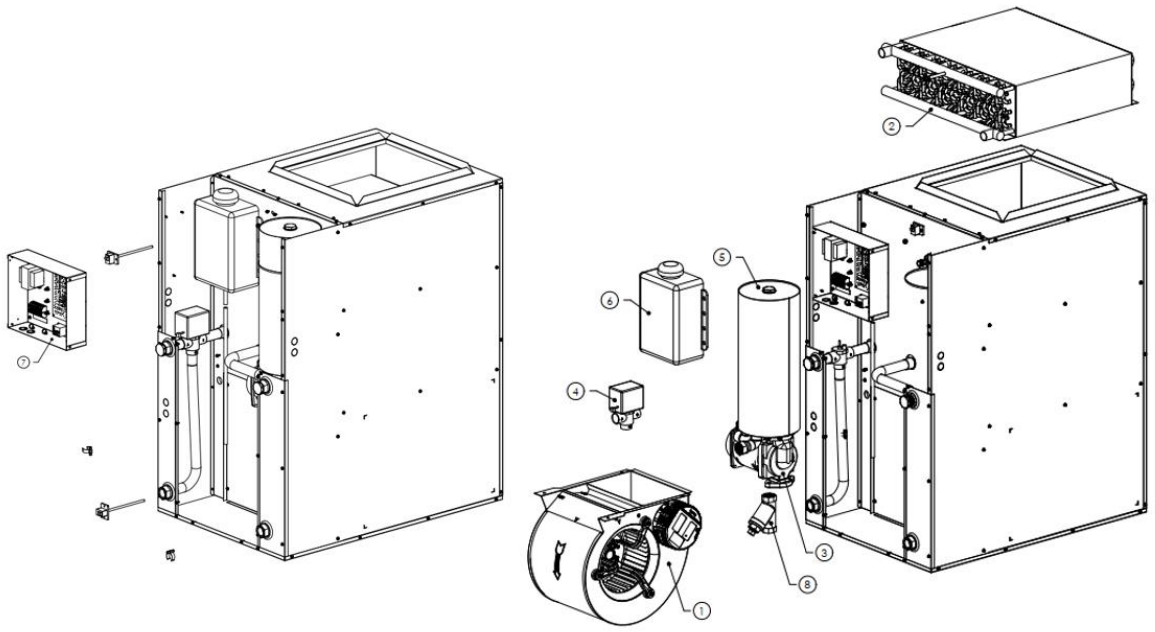

Figure 2: AHU Components – Exploded View

The ANESI AHU contains the following major components:

1. Variable speed blower
2. Hydronic air heating coil
3. Circulating pump
4. 3-Way valve
5. Fill/Purge Tank
6. Glycol Reserve Tank
7. Control box
8. Y-strainer

1.6 Technical Data

Performance Ratings		
Coil Capacity	65,000 BTU/hr	19 kW
Rating Condition: 125 °F (52 °C) Hydronic Supply, 68 °F (20 °C) Return Air		
Hydronic Flow Rate	8.5 GPM	32 LPM
Operational Limits		
Air Flow	500 to 1,400 CFM	14 to 40 m^3/min
Max airflow shown at 1 inch H2O (2.54 cm H2O) static pressure		
Max Inlet Fluid Temperature	180 °F	82 °C
Ambient Temperature	32 to 130 °F	0 to 38 °C
Environmental Rating	IPX1	
Electrical Ratings		
Voltage	115 VAC , 60 Hz	
Minimum Circuit Ampacity	14.3 Amps	
Maximum Overcurrent Protection Rating	20 Amps	
Physical		
Length	33.6 in	85.3 cm
Width	23.1 in	58.6 cm
Height	40 in	101.6 cm
Weight	210 lb	95 kg
Hydronic Connections	1" FNPT	
Nominal Hydronic Head	4 psi	10 ft H2O , 27 kPa
Hydronic Volume	6 gallons	23 L

Built-In Hydronic Pump Curve

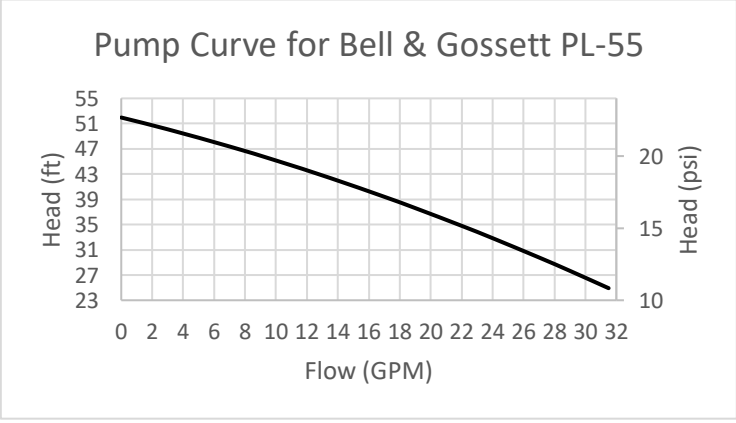

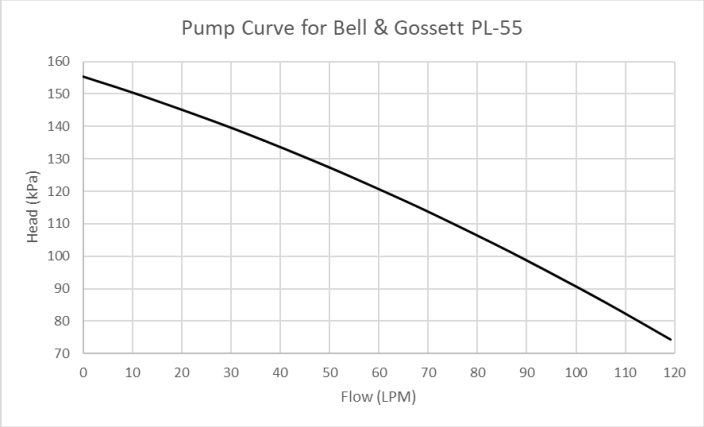

Blower Performance Data – Table

Air Flow (CFM)												
	External Static Pressure (in WC)											
Fan %	0	0.1	0.15	0.2	0.3	0.4	0.5	0.6	0.7	0.8	0.9	1
15	570	520	500	480								
20	690	650	630	610	570	540						
30	910	870	850	830	790	750	720					
40		1060	1040	1020	980	940	910	870	830			
50		1220	1200	1180	1140	1110	1070	1030	980	940	900	850
60			1330	1310	1280	1240	1200	1160	1120	1070	1010	960
70				1410	1390	1350	1320	1280	1230	1170	1120	1050
80				1480	1460	1440	1410	1370	1320	1270	1210	1140
90					1520	1500	1480	1440	1400	1350	1280	1210
100					1540	1540	1520	1500	1460	1410	1350	1270

Air Flow (L/s)												
	External Static Pressure (kPa)											
Fan %	0.00	0.02	0.04	0.05	0.07	0.10	0.12	0.15	0.17	0.20	0.22	0.25
15	270	250	240	230								
20	330	310	300	290	270	250						
30	430	410	400	390	370	350	340					
40		500	490	480	460	440	430	410	390			
50		580	570	560	540	520	500	490	460	440	420	400
60			630	620	600	590	570	550	530	500	480	450
70				670	660	640	620	600	580	550	530	500
80				700	690	680	670	650	620	600	570	540
90					720	710	700	680	660	640	600	570
100					730	730	720	710	690	670	640	600

1.7 AHU Dimensions

All dimensions shown in inches [millimeters].

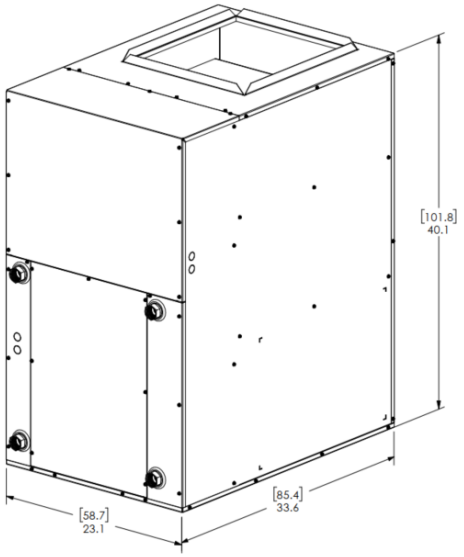

Figure 3: AHU Overall Dimensions

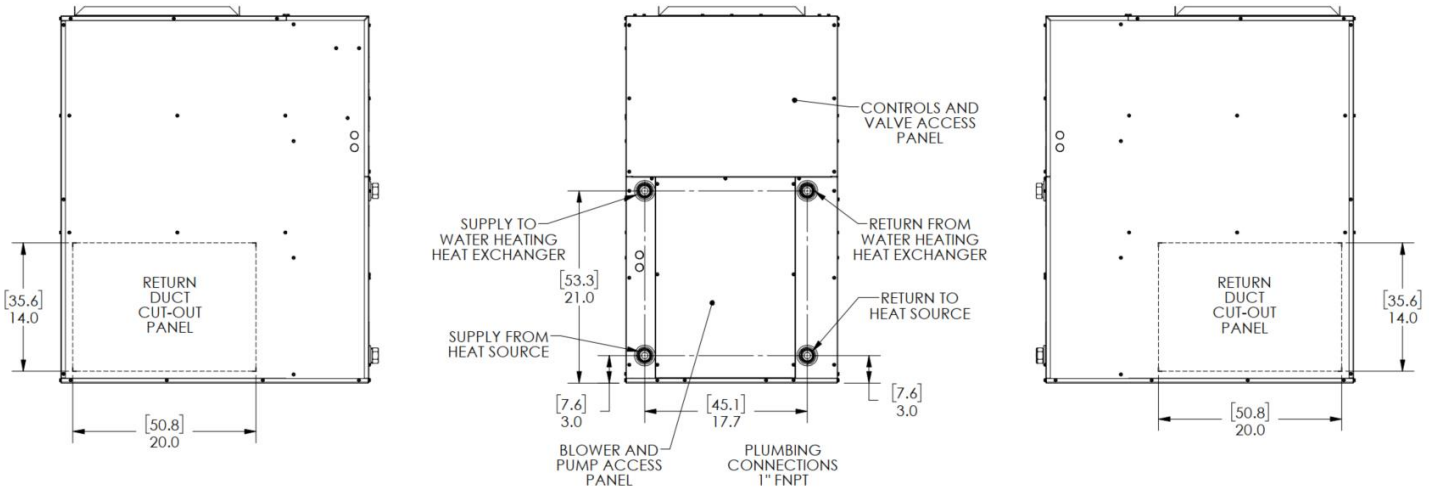

Figure 4: AHU Duct & Hydronic Connection Dimensions

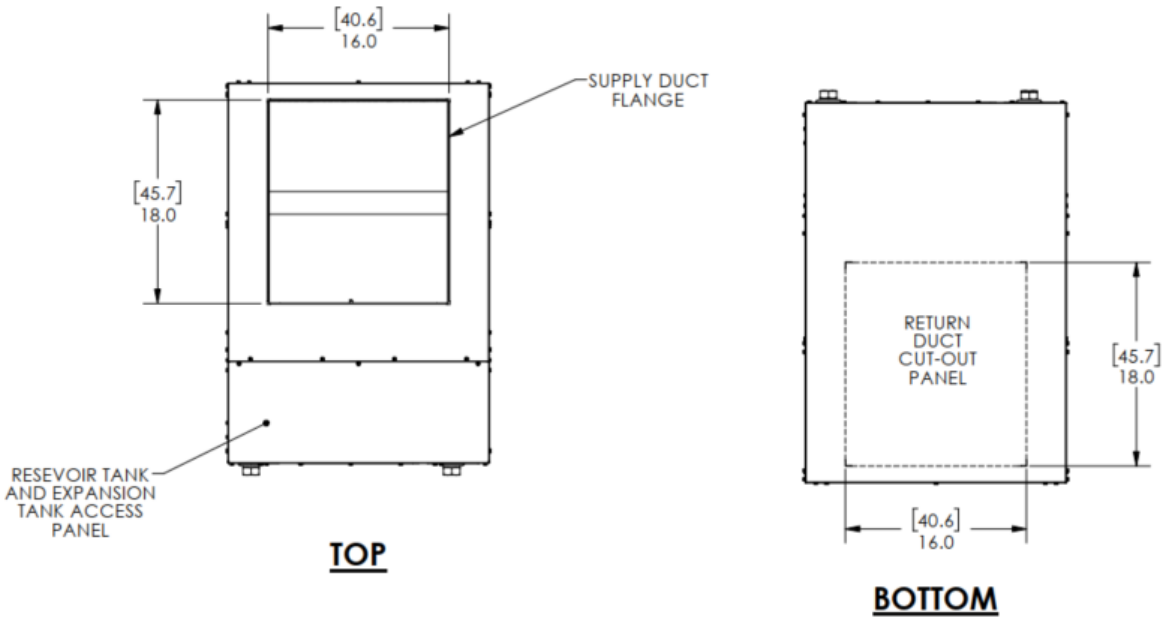

Figure 5: AHU Top & Bottom Duct Dimensions

2 Installation

2.1 General Information

WARNING

Read this entire manual, as well as the instructions supplied with separate equipment, before starting installation.

DANGER

The electrical power supply fixed wiring must include means to disconnect from the mains. This may be a circuit breaker or a dedicated disconnect box according to local codes.

These instructions do not supersede national or local codes. Compliance with all local, state/provincial, or national codes pertaining to this type of equipment should be determined before installation.

All AHU models are designed for indoor installation only within the specified ambient temperature range.

It is recommended that a qualified professional who has attended an ANESI installation training class complete the installation.

Select the installation position that best suits the site conditions. Consider required clearances, space, and routing requirements for hydronic lines, filters, ductwork, wiring, and accessibility for service. The AHU must be installed with adequate clearance allowing the front panel to be removed for servicing. Do not block the access to the front panel with hydronic plumbing.

Do not remove the cabinet knockouts (power, return air) until it has been determined which knockouts need to be removed for the installation.

The return air duct must have an air filter installed with an area of 14” x 20” or larger if installed using the side inlets and 16” x 18” or larger if installed using the bottom inlet.

2.2 Positioning the AHU

2.2.1 Site Preparations

Before installation of the AHU (and optional storage tank) is started, a site survey should be completed to determine the following:

1. Is space sufficient (based on dimensions and clearances from Sections 1.7 & 2.2.3)?
2. Is the ductwork sized properly for the airflow?
3. Is there enough available power in the breaker box?
4. Where will the hydronic lines between the AHU and heat source be installed?
    a. NOTE: When possible, lines should be kept short and use as few fittings (elbows) as possible.

2.2.2 Configuration and Orientation

The AHU is approved only for up-flow supply air configuration, oriented with the bottom panel level with the floor with return air ducting to either the side (left or right) or bottom of the AHU.

Stable installation – The AHU must be placed in a position where it will not move or rock in place.

If using the bottom return air opening, the return duct must be the same size as the AHU footprint and capable of supporting its full weight.

The AHU may be installed on concrete, wood flooring, or a fiberglass / polymer platform placed on secure flooring.

The AHU should NOT be installed directly on a dirt or gravel floor.

2.2.3 Clearances

This product is approved for attic, closet, or alcove installation with zero clearance to combustible materials. As shown in Figure 6, a minimum of 24 inches (61 cm) clearance is required for the front panel and 24 inches (61 cm) from the top for service access of the internal components.

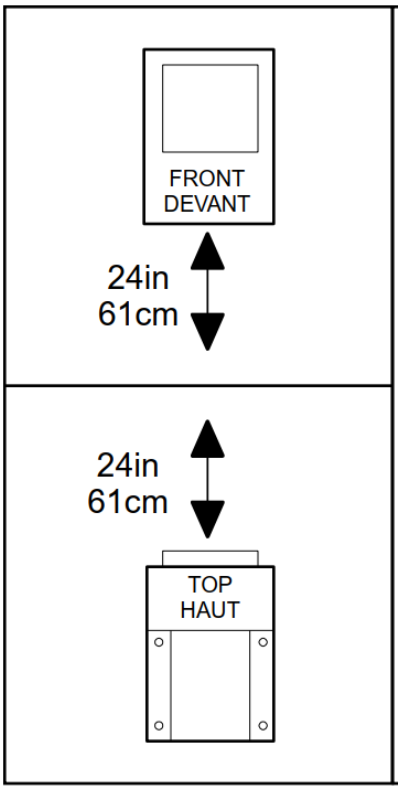

Figure 6: AHU Clearances

Depending on the chosen location for installation of the AHU, some may require special considerations:

Attic

If the AHU is to be installed in an attic:

- Ensure adequate supports are in place to handle the weight of the AHU.
- With any hydronic system, potential leaks are a concern; as such, ensure measures are taken to prevent potential water damage to the home.
- A drain pan and float switch should be installed. This float switch must be connected in series with the AHU’s tank “Float Switch” wiring as shown in Figure A5 of Appendix A. The float switch MUST be rated for 24 VAC circuits to function properly.

Laundry Room

The AHU has an environmental rating of IPX1 as shown in Section 1.6. It may be installed in a laundry room.

2.2.4 Adding an Air-Conditioning Coil

If air-conditioning is desired, a separate coil (Evaporator A-coil) must be added on top of the AHU. Follow the air-conditioning equipment manufacturer's guidelines for proper installation of the coil. The air-conditioning coil must be placed on a drain pan to collect and dispose of the condensate. If not done the condensate could drop directly onto the AHU blower causing electrical damage.

If the appliance is installed with air conditioning, the A/C refrigerant charge and system operation must be verified by a licensed technician prior to commissioning.

2.3 Hydronic Plumbing

2.3.1 Plumbing Requirements

The hydronic flow rate target for the AHU when matched with an 80 kBTU/hr GAHP is 8.5 GPM (32 LPM), with a range from 7 to 10 GPM (27 to 38 LPM). If using an alternative heating source refer to its literature for target flow rates. Note: A flow rate below 4.5 GPM (17 LPM) will result in a fluid velocity below recommended values.

Make connections using 1 inch diameter oxygen-barrier PEX or copper lines, keeping the length of lines to a minimum and the number of elbows to a minimum while providing safe, secure, and adequate hydronic line placement.

If PEX is the chosen material for the hydronic lines, it is required to use the oxygen-barrier type to prevent long-term issues with corrosion buildup in the heat exchangers of the GAHP.

If bends are required, use sweeping bends rather than hard 90-degree bends or elbows wherever possible.

It is recommended that valves be included in the plumbing to the heat source and water heating loop (if applicable) in order to dial in flow as close as possible to the 8.5 GPM (32 LPM) target.

- **NOTE:** If installed in line with ANESI's gas absorption heat pump (GAHP), there are 2 isolation valves at the GAHP's supply & return ports.

Ensure all plumbing components are rated above the maximum system temperature and compatible with inhibited propylene glycol.

The hydronic connections are 1 inch Female NPT. Use PTFE thread seal tape on the male threads of the adapters installed here.

⚠ CAUTION

The included valves are soldered to the internal plumbing in the AHU; therefore, a back-up wrench MUST be used when connecting hydronic lines to prevent damage.

Hydronic lines must be well insulated to prevent energy loss to the ambient air. Hydronic lines located outside should be insulated to an R-value of at least 8.0 (most 2-inch-thick foam pipe insulation), and indoor lines should be insulated to an R-value of at least 4.0 (most 1-inch-thick foam pipe insulation). Insulation used for outdoor lines must be suitable for outdoor use, UV exposure, and sealed against moisture.

Pressure and leak tests should be completed on all hydronic lines before insulation is applied.

If installed with ANESI's GAHP, a pressure relief valve set at 60 psi (414 kPa) is already installed on the hydronic supply manifold inside the GAHP. No other relief valve is required. If using another heat source, a relief valve set at 60 psi (414 kPa) MUST be installed in the hydronic system if one is not incorporated in the heating appliance. If the heating appliance requires a lower set point for the PRV, follow its requirements.

An automatic air vent valve is provided in the AHU as shown in Figure 7. A separate air vent valve is only required if hydronic plumbing creates an air trap higher than the AHU.

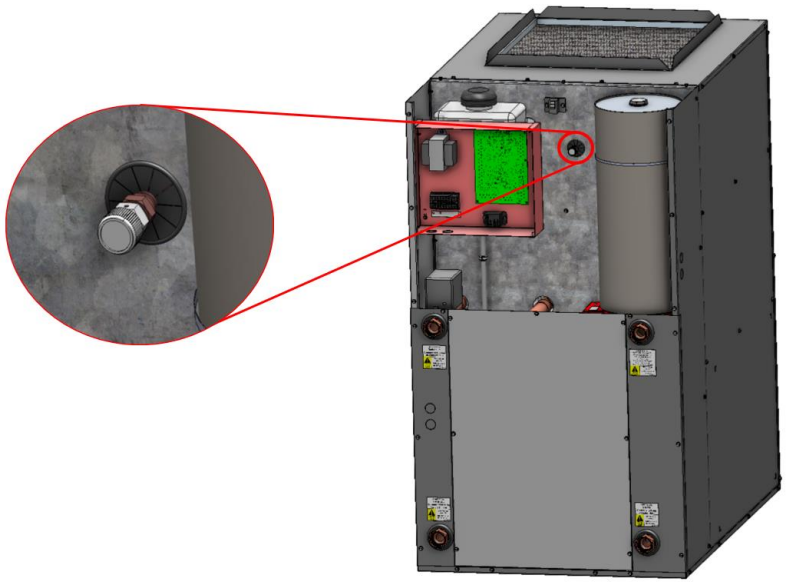

Figure 7: Air Vent Location

2.3.2 Expansion Tank

All liquids used in hydronic heating systems expand when heated. The ANESI AHU is equipped with a built-in expansion tank, eliminating the need for an external expansion tank.

2.3.3 Reserve Tank

The AHU is equipped with a 1-gallon reserve tank that is intended to makeup glycol should a small leak or fluid loss occur. This eliminates the need to include a glycol feeder in the hydronic system.

2.3.4 Pressure Relief Valve (NOT included in AHU)

Installing a pressure relief valve (PRV) is required when the AHU is integrated with a boiler or other heating system besides an ANESI heat pump to safeguard the system against unintended over-pressurization. The recommended pressure setting for the PRV is 60 psig (414 kPa). The PRV should be installed at the DHW return (top right) port. If the AHU is not setup to provide DHW the plug shipped in this port can be removed and a PRV may be installed with an adapter fitting.

DO NOT install a PRV if the AHU is coupled with an ANESI gas heat pump.

2.3.5 Hydronic Equivalent Flow Resistance Calculations

The hydronic flow rate is crucial for ANESI's AHU to provide the best performance possible.

The hydronic pump installed in the AHU has an approximate maximum head capacity of 46-Feet$_{H2O}$ (20 psi, 137 kPa) at 8.5 GPM (32 LPM) of flow. The available head will depend on the equipment installed, the length and size of lines, fittings, etc.

Before the total hydronic resistance of a piping circuit can be found, the individual hydraulic resistances of all fittings, valves, or other components must be determined. One approach is to consider each fitting, valve, or other device as an equivalent length of copper tube of the same pipe size. By using the equivalent length of piping for all components in the circuit, the circuit can be treated as if it were a single piece of pipe having a length equal to the sum of the actual pipe length, equipment, total equivalent lengths of all fittings, valves, or other devices.

Below are the steps for determining the hydronic head loss and expected flow rate specific to the installation (once a sketch of the expected plumbing for the system has been drawn):

- STEP 1: Equipment Head Loss
- STEP 2: Fittings Equivalent Loss
- STEP 3: Line Head Loss
- STEP 4: Calculate
- STEP 5: Reevaluate

WARNING: Not completing this calculation correctly can result in added cost and installation issues. It is up to the installer to properly plan the site.

STEP 1: Equipment Head Loss

NOTE: If including the domestic hot water (DHW) heating option, when making the following calculations, keep in mind that space heating and domestic water heating are two separate loops that will have different head losses that must be calculated individually to ensure proper flow rates.

It is recommended to dial in the flow for space heating (SH) as close to the target as possible. It is not as critical to achieve the target 8.5 GPM (32 LPM) for the water heating loop, efforts should be made to ensure the flow is at least at the low end of the range (7 GPM / 27 LPM). It is recommended to install isolation valves near the connection ports at the IST to allow for future serviceability and a method of dialing in the flow rate.

The table below shows the average pressure drops associated with ANESI's equipment and the remaining head capacities.

Refer to the manufacturer's specified pressure drop for the coil inside the indirect storage tank.

Component	Nominal Pressure Drop		
	FT_{H2O}	psi	kPa
*All values are estimated at the target 8.5-GPM (32-LPM) flow rate and 40% Propylene Glycol.			
ANESI AHU (SH Side)	9	4	28
ANESI AHU (DHW Side)	5	2	14
80 kBTU/hr GAHP	14	6	41

Table 1: ANESI Equipment Pressure Drops

For any appliances connected in line with the AHU other than ANESI's GAHP, find the manufacturer's pressure drop and include that in your calculations for the total head loss.

STEP 2: Fittings Equivalent Loss

Add up the total equivalent head loss for all fittings, valves, and additional equipment to be installed in the system.

Below is a table providing average pressure drops of common fitting types that can be used as a guide. However, the following equivalent lengths are generalizations and not brand specific; for detailed information please see the manufacturer of the fitting that will be used in the actual installation. Additionally, the following is only a guide for expected values and therefore should be used with appropriate consideration.

Equivalent Length of Straight Pipe for Valves and Fittings (feet)			
Threaded (PEX) Fittings		Pipe Size (inches)	
		3/4	1
Elbows	Regular 90 deg	4.4	5.2
	Long radius 90 deg	2.3	2.7
	Regular 45 deg	0.9	1.3
Tees	Line flow	2.4	3.2
	Branch flow	5.3	6.6
Return Bends	Regular 180 deg	4.4	5.2
Valves	Ball (Full Port)	0.2	0.3
	Ball (Reduced Port)	22	27
	Globe	24	29
	Gate	0.7	0.8
	Angle	15	17
	Swing Check	8.8	11
Strainer		6.6	7.7

** Based on Schedule 40 Steel Pipe*

Table 2: Equivalent Length for Valves & Fittings – Threaded (PEX)

Equivalent Length of Straight Pipe for Valves and Fittings (feet)			
Copper Soldered Fittings		Pipe Size (inches)	
		3/4	1
Elbows	Regular 90 deg	1.6	2.5
	Long radius 90 deg	1.4	1.0
	Regular 45 deg	0.5	1.0
Tees	Line flow	0.5	0.5
	Branch flow	3.0	4.5
Valves	Ball (Full Port)	0.5	0.5
	Swing Check	3	4.5

** Based on Copper Tube*

Table 3: Equivalent Length for Valves & Fittings – Copper (Soldered)

STEP 3: Line Head Loss

The length of each run of piping will need to be totaled and converted into head/pressure losses.

Below is a chart providing some average equivalent lengths of Type L copper and PEX lines that can be used as a guide. However, the following equivalent lengths are generalizations and not brand specific; for detailed information please see the manufacturer of the lines that will be used in the actual installation.

Average Pressure (Head) Loss		
values based upon 40% PG at 8.5 GPM, 70°F fluid		
Line Material	Pipe Size (inches)	UNITS
	1	
Type L Copper Lines	0.03	PSI/FT
	0.07	FT_{H2O}/FT
	0.2	kPa/FT
PEX	0.07	PSI/FT
	0.16	FT_{H2O}/FT
	0.5	kPa/FT
Schedule 40 Steel Pipe **(USE THIS for converting equivalent length of FITTINGS)**	0.06	PSI/FT
	0.15	FT_{H2O}/FT
	0.4	kPa/FT

Table 4: Average Pressure (Head) Loss

STEP 4: Calculate

Taking the values determined in the previous steps, use the following equation:

TOTAL HEAD LOSS = (Equipment Head Loss STEP 1) + (Fittings Equivalent Loss STEP 2) + (Line Head Loss STEP 3)

EXAMPLE:

			Equivalent Length (ft)		
Component	Quantity	Length (ft)	Individual	Total	Head Loss (PSI)
AHU (SH Side)	1	--	--	--	4
GAHP	1	--	--	--	6
Elbows (1-inch, Regular 90°)	6	--	5.2	31.2	1.9
Ball Valve (1-inch, Full Port)	2	--	0.3	0.6	0.04
Tees (1 inch, Line flow)	2	--	3.2	6.4	0.4
Strainer (1 inch)	1	--	7.7	7.7	0.5
PEX (1 inch)		60	60	60	4.2
				TOTAL:	17.0

As seen in the table above, if 60 feet of 1-inch PEX was used with the other various components listed then the total pressure drop going through the space heating coil of the AHU would be 17 psi (39 ft H2O / 117 kPa). A similar calculation would need to be performed for the DHW loop using the "DHW side" of the AHU as the equipment's pressure drop.

STEP 5: Reevaluate

Based on the total head loss calculated from STEP 4, the loop will fall into one of the following ranges below and need to follow the subsequent steps entailed:

TOTAL Head Loss Ranges	Next Steps
Below 45 FT_{H2O} (19.5 PSI) (134.5 kPa)	The flow rate will go beyond the maximum 10 GPM and need to be cut down (preferably targeting 8.5 GPM)
	Utilize an existing or install a valve that can be throttled down slightly to dial in the flow.
45 to 47 FT_{H2O} (19.5 to 20.4 PSI) (134.5 to 140.5 kPa)	This is an optimum range to be in to provide the best flow
Greater than 47 FT_{H2O} (20.4 PSI) (140.5 kPa)	The flow rate will be below the minimum limit of 7 GPM and will need to be brought up.
	Reevaluate the loop and eliminate any excessive bends, lengths, hard 90's, etc. to bring the equivalent head down (recalculate values accordingly, as detailed in STEPS 2 through 4).
	If no fittings can be eliminated and the length of pipe cannot be shortened, a booster pump will be required. See section 2.3.5 for details on selecting an appropriate booster.

2.3.6 Booster Pump Requirements

Performance requirements may dictate that a booster pump be installed to ensure sufficient flow based on the length and number of bends in the hydronic system.

It is recommended that **ALL** possible measures be taken in an attempt to resolve the head loss issue before deciding to install a booster pump.

If a booster pump is required:

- The following pumps come at ANESI's recommendations from results on sound level and in-house testing with our equipment.
- See the selected booster pump's installation manual and follow all manufacturer's guidelines.
- The location of the booster pump is important:
  1. It must be located where sound, possible leaks, heat, and wiring will not be a concern.
     - Be observant of how the booster pump is mounted. If attached directly to a wall or floor the sound can reverberate through the home causing customer dissatisfaction.
  2. It must be installed AFTER the existing pump in the AHU. In other words, on the cold-water line going back out to the heating equipment.
  3. Proximity to the AHU is not critical.

It is often best practice for the booster pump to be the same size as the existing pump when plumbed in series. Therefore, below is a chart with recommendations for booster pumps with similar capacities. If the flow is only slightly below the target a smaller pump may be used; a recommendation is listed at the bottom of the following table.

Pump Capacity Range	**Booster Pump**
Same as existing pump	Bell & Gossett: PL-55
Similar	Taco: 2400-50-3P
	Grundfos: UPS 26-150F
Smaller	Grundfos: ALPHA2 26-99F

2.3.7 Connecting Hydronics to Heat Source

The Supply from Heat Source (in) and Return to Heat Source (out) connections are 1" FNPT.

Installation of isolation valves are recommended for future service, but not required. If valves are installed "Full Port" ball valves must be used to prevent excessive pressure drop.

It is recommended to install a check valve downstream of Return to Heat Source connection to prevent backflow if the heat source is at a higher elevation than the AHU.

When connecting hydronic lines to the AHU, take care that the lines do not prevent removing the service panels. It is recommended to run the lines vertically, when possible, to keep access to these panels open, as shown in Figure 8 below.

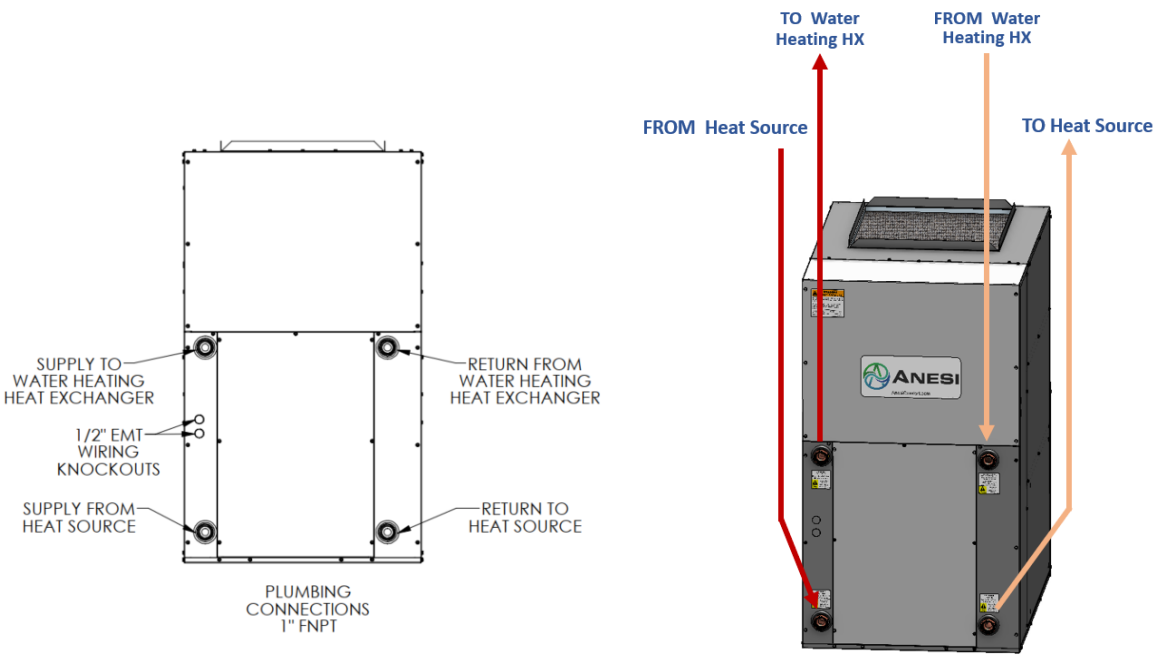

Figure 8: Hydronic Plumbing Connections

2.3.8 Connecting Optional Domestic Hot Water Heating

ANESI's air handling unit includes plumbing and controls for an *optional* domestic water heating system. The following sections outline steps should the homeowner want to add this feature. If the homeowner does not desire this feature the two top ports should remain plugged in as shipped.

NOTE: If the homeowner shows interest in this feature but is not ready at the time of installation, it is recommended to install ball valves with plugs in these DHW ports to save time and prevent the need to drain glycol from the AHU at a later date.

Should the homeowner desire the optional domestic hot water feature with the AHU:

ANESI's 80-gallon indirect storage tank is highly recommended and includes tank temperature sensors that improve overall heating system performance and efficiency. It is a lightweight construction with a polymer tank that will not corrode and requires no anode rod to maintain. For installation, maintenance, and service details, refer to the specific instructions provided with the tank.

Compatibility and operation with other ISTs or storage tanks have not been tested nor come with a recommendation by ANESI. Therefore, should a different tank other than the above be desired, refer to the general tank specifications outlined in Appendix F or contact an ANESI sales representative for further guidance.

The ANESI storage tank heat exchanger is plumbed to the AHU to "share" the hydronic fluid, while the tank has a separate cold inlet and hot outlet to the building distribution piping for domestic hot water. The AHU control software will intelligently and automatically switch between space heating and domestic hot water heating based on the demand.

2.3.8.1 Domestic Hot Water (Double-Wall Requirement)

For jurisdictions that require a double-wall between the domestic hot water (DHW) and the glycol system, a double-wall plate heat exchanger (PHX) is required. A separate loop is required to circulate water out of the tank and through the PHX. For specific details on the size of PHX and hydronic pump to be used please contact ANESI technical support. Figure 9 can be used as reference to what a general installation might look like for a residential application where the ANESI AHU is being used.

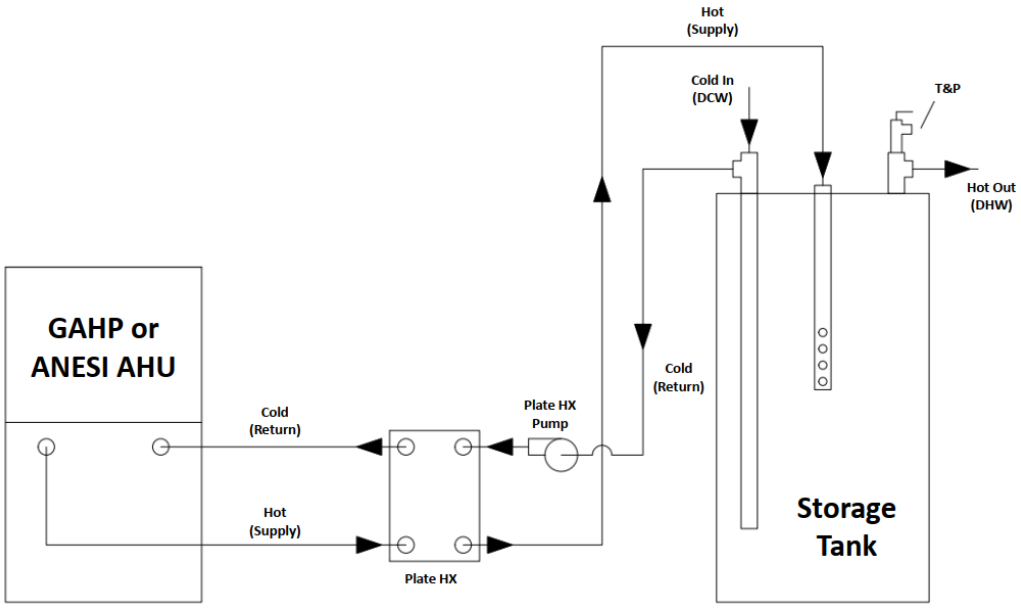

Figure 9: DHW with a Double-Wall PHX

2.4 Connecting the Ductwork

2.4.1 Ducting Requirements

The AHU has the following ductwork connections as shown in Figures 4 & 5 of Section 1.7:

- Supply air (top of the AHU)
- Return air (side [left or right] or bottom)

The AHU requires either a filter frame installed on the return air opening or return ductwork leading to a whole house filter.

Supply and return ductwork must be adequately sized to meet the system's air flow requirements and static pressure capabilities outlined in Section 1.6.

The supply plenum should be the same size as the supply flanged opening, and it is recommended that it extends upwards at least 3 ft (1 m) from the AHU before turning or branching off into duct runs. Doing so forms an extension of the AHU housing minimizing air expansion losses and reducing noise from the blower.

2.4.2 Ductwork Installation

The supply air plenum must be secured to the flanges of the AHU via sheet metal screws and sealed with duct tape or other suitable material.

Once it is determined which return duct orientation is best suited for the installation, cut and remove the panel as indicated by the perforations. Attach the ductwork via sheet metal screws and seal with duct tape or other suitable material. Do NOT cut all panels out; only the one to be connected to the return duct.

As part of the installation checklist shown in Appendix D, during the commissioning ensure all ductwork connections to the AHU are sealed properly to prevent air leakage.

2.5 Thermostat Recommendations & Settings

If the AHU is connected to an ANESI GAHP there are specific thermostat settings that must be selected when setting up the thermostat to operate the heat pump.

Since the AHU is intended for installations where a furnace is being replaced, the control signals for space heating are set up as "W1" and "W2".

NOTE: This is different from electric heat pumps that are commonly installed using the "Y" signals and "O" for the reversing valve.

The AHU can operate with a multitude of thermostats, but when setting up the thermostat to operate with a GAHP the following capabilities:

MUST be met:

- Space Heating via "W1" (Stage 1)

Optional but HIGHLY recommended for system comfort & optimal performance:

- Space Heating via "W2" (Stage 2)
- A temperature differential of at least 1 degree for "W1" heating.
- A temperature differential of at least 3 degrees for "W2" heating.
    - **NOTE:** Temperature differential may also be referred to as temperature "swing", "decay", or "deadband".

NOTE: Thermostats with very low temperature differentials can cause excessive cycling of the heating equipment which in turn will result in lower efficiency, more wear on the components, and/or lower comfort.

2.6 Electrical Connections

2.6.1 Electrical Requirements

ANESI's AHU has four sets of wiring connections:

- Supply power to AHU (115 V, 60 Hz)
- Control wiring from AHU to GAHP or other heat source
- (Optional) Control wiring from AHU to IST or DHW Storage Tank
- Control wiring from thermostat to AHU

The A0802WAVXX requires 115 Volts, 60 Hz with a minimum circuit ampacity of 14.3 Amps. The maximum circuit breaker rating is 20 Amps.

WARNING

RISK OF ELECTRICAL SHOCK. CAN CAUSE INJURY OR DEATH: System contains oversize protective earthing (grounding) terminal which shall be properly connected. Grounding conductor must be 12 AWG minimum.

If installing the AHU with an ANESI gas absorption heat pump (GAHP), Modbus communication should be used for maximum functionality. A CAT5 cable (shielded OR unshielded & often used for ethernet) must be used and shall be run between the two pieces of equipment taking precautions to limit excessive length where possible. The cable should terminate at the "Equipment Comms" terminal on the AHU control board and the "RS485 Aux" terminal of the GAHP-OD control board as shown in Figure 10. Match signals (A, B, GND) as shown at the terminals for each board.

CAUTION

Use of anything other than CAT5 cable for Modbus could result in communication issues and faults.

An alternative method is to use standard thermostat wires to control the GAHP. This cable would be run to the push-style connectors on the GAHP-OD Control Board.

***IMPORTANT:* If Modbus communication is NOT used with the ANESI AHU, the indoor equipment will NOT be seen on the webpage app which assists with installation, monitoring, and servicing.**

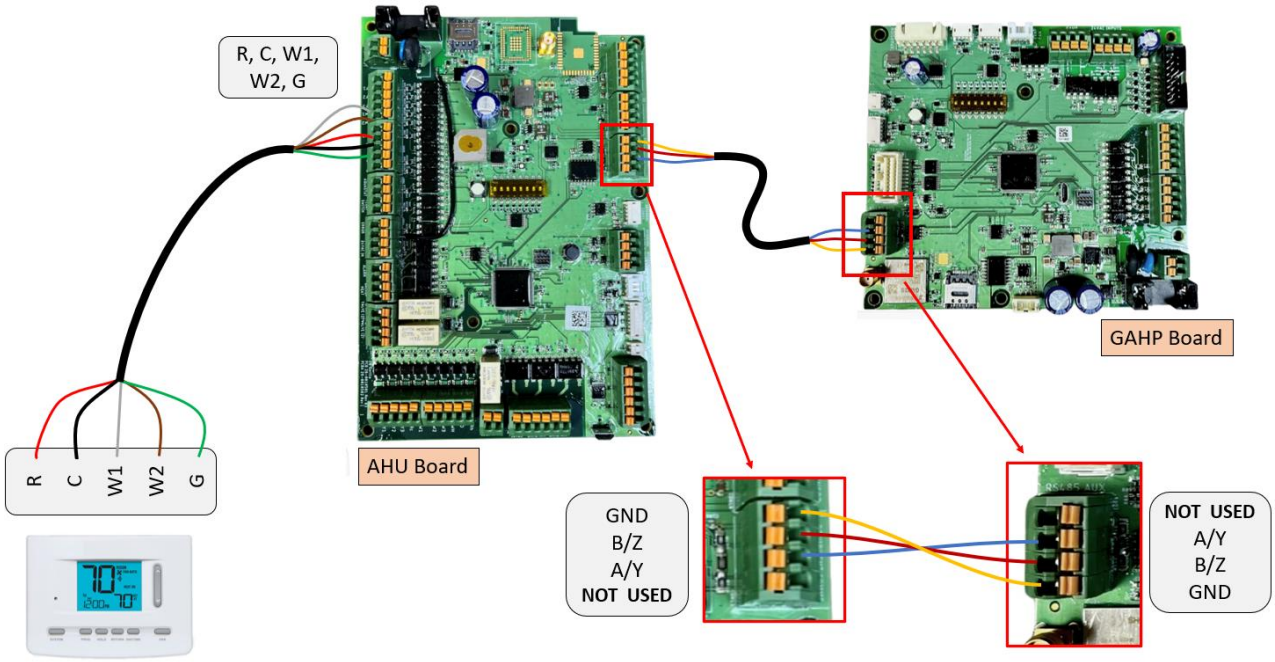

Figure 10: Residential Space Heating - Modbus Wiring (w/ ANESI AHU)

2.6.2 Primary Power

There are 3 sets of electrical knockouts on the AHU panels located on either side and the front, as seen in Figure 11 below. It is recommended that the side electrical knockouts be used, and the front knockout be used only if necessary. Choose the appropriate electrical knockout to run the 115 VAC line, neutral, and ground wiring into the AHU according to local and national electric codes. The three wires will need to be run to the respective screw terminals in the AHU control box and secured as shown in Figure A1 of Appendix A.

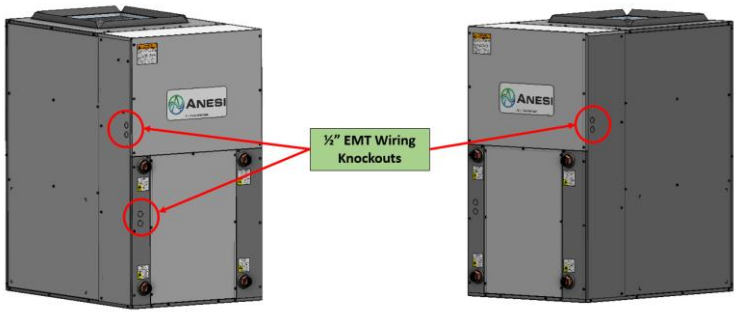

Figure 11: Electrical Knockout Locations

2.6.3 Control Wiring: Space Heating Thermostat to AHU

The AHU is equipped with all of the common thermostat connections for running various different types of appliances. The thermostat will communicate with the AHU, and the AHU will send the appropriate signal(s) to the heating or add-on cooling appliances.

When connecting a thermostat to the AHU here are the common connections as seen in Figure 12.

- Y1 = Space Cool (Stage 1)
- Y2 = Space Cool (Stage 2)
- Y3 = Space Cool (Stage 3) – *Future. No logic is currently associated with this signal.*
- W1 = Space Heat (Stage 1)
- W2 = Space Heat (Stage 2)
- W3 = Space Heat (Stage 3) – *Future. No logic is currently associated with this signal.*
- R = 24 VAC Power
- C = 24 VAC Common
- G = Fan Only
- O = Reversing Valve (for use with Electric Heat Pumps)

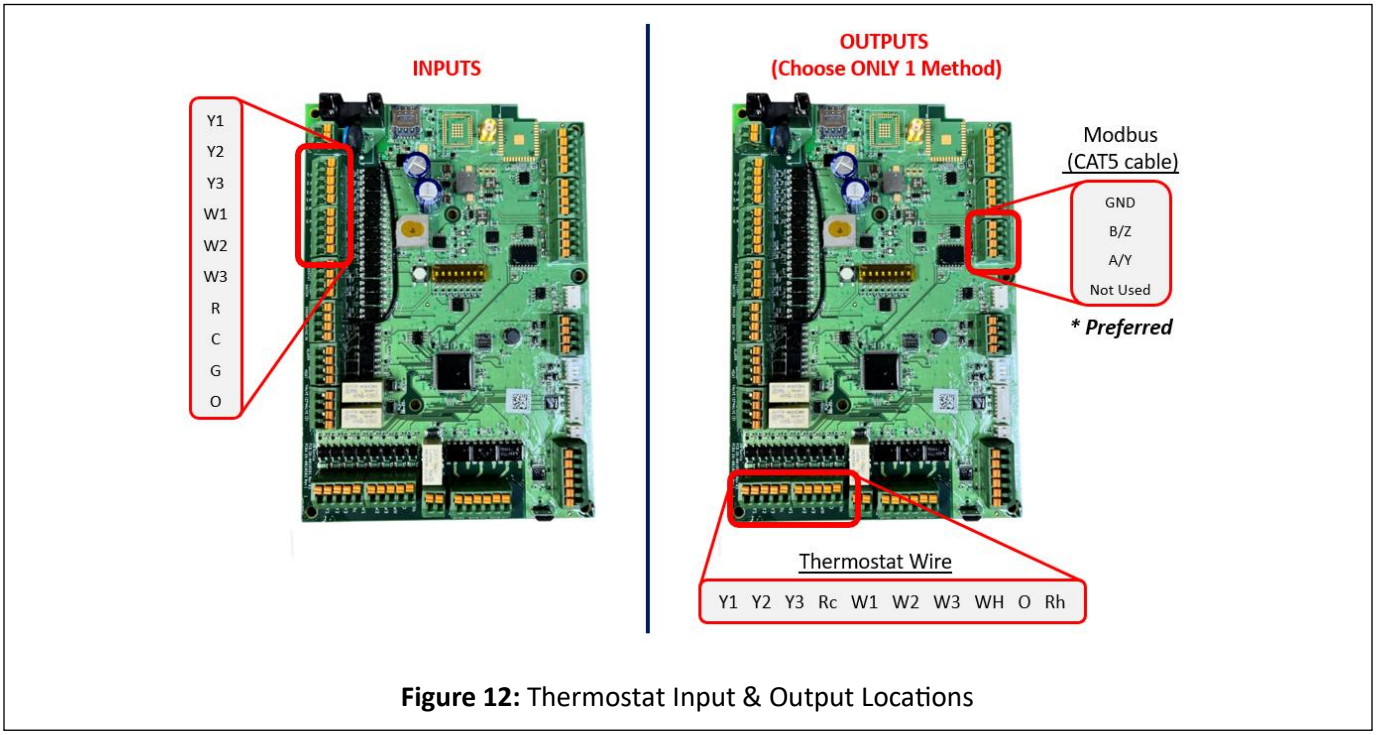

Figure 12: Thermostat Input & Output Locations

2.6.4 Control Wiring: AHU to GAHP or Heating Appliance

If the alternative method of connecting the AHU to the ANESI GAHP using thermostat wires is chosen instead of Modbus, a minimum 6 conductor cable should be run from the AHU control board to the GAHP-OD control board (match terminals):

- AHU Board: Rh, W1, W2, and WH
- GAHP-OD Board: R, W1, W2, WH, and jumper between J1 & J2 (pre-installed from factory)
- In addition to the thermostat signals, 2 conductors for the "GAHP Error" signal must be run between the AHU and GAHP. Refer to Figures A2 & A3 in Appendix A for details.

If wiring the AHU to a different heating appliance refer to its respective installation manual for wiring instructions. In addition to the required thermostat signals the following connections will also need to be made.

- A jumper wire for the "GAHP Error" signal

The AHU is equipped with logic and hardware to run a backup heating appliance if desired. This could be a boiler in combination with the GAHP for hydronically heated homes where the house requires hydronic temperatures greater than what the GAHP can provide during peak loads. The backup appliance would be wired to the "Backup Heat" dry contact on the control board as shown in Figure A4 of Appendix A.

2.6.5 (Optional) Control Wiring: AHU to IST

If the AHU is being installed to an ANESI indirect storage tank, then a 6-conductor cable should be run from the Aquastat to the AHU control board. The required signals for this are as follows, also shown in Figure A3 of Appendix A:

From ANESI Indirect Storage Tank to ANESI AHU control board:

- Aquastat: No polarity; this is simply a switch closing the circuit. Connect from the "Switch" terminals on the ETC 102 to the terminals labeled "Aquastat" on the AHU control board.
- Aquastat Power: Connect to the terminal labelled "Spare 24 VAC Out" on the AHU control board. Wire to the "TR" and "C" terminals on the ETC 102 aquastat.
- Low Tank Thermistor: No polarity. This is the **BLACK** wire pre-installed on ANESI custom tanks. Connect to terminals labeled "IST Low Temp" on AHU control board.

The DIP Switch #2 must be changed to OFF to indicate that the ANESI tank is installed which includes a LOW Tank thermistor, refer to Section 4.1 for a DIP Switch table.

For Double-Wall DHW Applications:
If the installation requires a double wall between the glycol and domestic hot water as referenced in Figure 9, then follow the wiring schematic shown in Figures A3, A6, and A7 of Appendix A.

From ANESI Storage Tank to Anesi AHU control board:

- Aquastat: No polarity; Connect from the "Switch" terminals on the ETC 102 to the terminals labeled "Aquastat" on the AHU control board
- Aquastat Power: Connect to the terminal labelled "Spare 24 VAC Out" on the AHU control board. Wire to the "TR" and "C" terminals on the ETC 102 aquastat.
- Low Tank Thermistor: No polarity. This is the **BLACK** wire pre-installed on Anesi custom tanks. Connect to terminals labeled "IST Low Temp" on AHU control board.
- DHW Circulator Pump Power:
    - This pump must be powered through an external relay. The AHU control board cannot power the pump directly.
    - The DHW circulator pump should turn ON at the same time as the existing 3-way valve in the AHU. Therefore, the 24VAC coil for the external relay should be wired into the power for the existing 3-way valve inside the AHU, "3-way valve (1)" as shown in Figure A6. This can be done by either:
        - splicing into the control wires
        - doubling the wires at the control board push-in connector.
            - If this method is chosen, ensure that there are no bare wires exposed at the connector. The connectors are sized to fit a maximum of two 18 AWG wires simultaneously.
    - Line power for the pump may be wired directly from the terminal block in the AHU as shown in Figure A7. The Hot wire should be ran to the switch side of the external relay coil, whereas the Neutral and Ground may be tied directly to the pump.

2.7 IOT Connection

If the AHU is connected to an ANESI GAHP and Modbus communication is implemented as outlined in Section 2.6 then the AHU may be seen on ANESI's webpage app by the homeowner and contractor. This app may be used to assist with the commissioning process by performing the following tasks:

- View all temperatures (Hydronic & Air + Tank temps if installed)
- Ability to set fan speeds for various modes.
- View Thermostat Inputs
- View Thermostat Outputs
- Control of the 3-way valve & Internal hydronic pump
- Monitor Blower speed status.
- Control of the Humidifier & Dehumidifier relay outputs
- View error logs

A step-by-step guide for connecting to the webpage app may be found in Appendix E.

2.8 Hydronic System Filling

2.8.1 Mixing glycol

ANESI's AHU requires a mixture of INHIBITED propylene glycol and distilled or deionized water when coupled with a GAHP. If tied to a different heating source refer to the manufacturer's literature for guidance on what type of hydronic fluid is required. Tap water may be used during the cleaning step but mixing tap water with inhibited glycol could cause early degradation of the corrosion inhibitors.

Temperature °F	Temperature °C	Percent (vol.) Fluid Concentration Required For Freeze Protection Volume %
20	(-7)	19.1
10	(-12)	30.9
0	(-18)	38.3
-10	(-23)	44.7
-20	(-29)	48.9
-30	(-34)	53.2
-40	(-40)	57.4
-50	(-46)	60.6
-60	(-51)	63.8

Figure 13: Inhibited Propylene Glycol Freeze Protection

The PH level of the glycol mixture should be checked. If the range is outside of 8.5 – 9.5 then it should be adjusted using "pH Up" or "pH Down" until within range.

The needed concentration of inhibited propylene glycol is dependent upon the site location. The system should be filled with a concentration that provides freeze protection against the minimum expected temperature at the site while using the minimum inhibited propylene glycol necessary (using more than necessary will negatively impact system performance). Below is a generic guide of the freeze protection expected from inhibited-propylene glycol. The installer must check what is needed for the brand that is used. Note: At least 25% should be used to prevent bacteria growth.

2.8.2 Filling The Hydronic System

2.8.2.1 Cleaning and Leak Checking the Hydronic Lines

Prior to filling the hydronic system with glycol, the lines must be cleaned. If installed with an ANESI GAHP then a bypass connection before the heat pump may be required depending on the method used for cleaning.

⚠ CAUTION

The hydronic lines **MUST NEVER** be cleaned by flowing through the GAHP or debris could clog the internal heat exchangers causing performance issues and possibly high-pressure faults.

Once cleaning is complete the entire system must be inspected for leaks. Any leaks should be addressed appropriately to ensure that the system runs safely and securely.
Once any leaks have been addressed proceed with the steps 2.8.2.2 through 2.8.2.4.

2.8.2.2 Filling Tank and Lines

To charge the hydronic system, begin by confirming that all valves (ball valves, isolation valves, etc.) in the system, including the DHW storage tank and the gas heat pump, are open.

- REMINDER: If installing the AHU with ANESI's GAHP, there are 2 isolation valves located at the GAHP's inlet/outlet ports.

Complete the following steps as shown in Figures 14 through 16 below.

1. Remove the top access panel on the AHU.
2. Remove the caps from both tanks.
3. Add inhibited propylene glycol mixture into the Fill/Purge Tank. The AHU ships with the makeup tube between the Fill/Purge Tank and the Glycol Reserve Tank disconnected and attached to the side of the Fill/Purge Tank to act as a level indicator. Fill the tank with glycol until the level is even with the steel zip tie near the top of the tank.

Note: For the following steps the Fill/Purge Tank MUST maintain a glycol level. If the tank drains completely the float switch will deactivate the pump to prevent damage. Continue adding glycol as the system fills.

A funnel or a small fluid transfer pump is recommended to add glycol to the tank to prevent spillage.

4. Turn on the hydronic pump to begin filling the system. This can be done by using the BLACK push button on the control board. Refer to Section 6.3.2 for push button logic.
    a) The pump may also be energized remotely, if the AHU is connected via Modbus to a GAHP with cellular connectivity, by logging into the ANESI webpage-based App. Instructions may be found in Appendix E along with a screenshot in Figure 15.

If the installation includes DHW as part of a COMBI system, then proceed to step 5. If not, proceed to step 6.

5. Once the AHU and heat source have been thoroughly filled (the level is no longer dropping in the Fill/Purge Tank) actuate the 3-way valve to fill the DHW loop. This may be done by manually sliding the small lever on the valve's actuator to the left until it latches.

    The valve may also be energized remotely via the app as shown in Figure 15.

    Once the level has stabilized, un-latch the lever or de-energize the relay in the app to allow the valve to return to normal operation.

6. After the lines have filled there may still be air in the system. The pump should be left ON for at least an additional 5 minutes with the 3-way valve in both positions.

7. Once the level in the Fill/Purge Tank has stabilized, indicating that air has been thoroughly purged from the system, the Fill/Purge Tank cap may be reinstalled.

8. Remove the sticker holding the makeup tube to the side of the tank. Connect the tube to the outlet side (black) of the check valve included with these instructions. Connect the inlet side (white) of the check valve to the tube on the bottom of the Glycol Reserve Tank. Secure the tubing on both sides of the check valve with the tube clamps provided.

9. De-energize the pump once the cap has been replaced by tapping the BLACK push button on the control board or by de-energizing the relay in the app.

⚠ CAUTION

If the heat source is located at a higher elevation than the AHU, i.e., GAHP at ground level & AHU in a basement, then the pump MUST remain ON until the Fill/Purge Tank cap is installed and the makeup tube is connected to the check valve on the Glycol Reserve Tank. Otherwise, the system's head will cause the glycol to run back into the Fill/Purge Tank and overflow. To prevent this problem, a check valve may be installed downstream of the "Return to Heat Source" connection.

10. Add glycol mixture into the Glycol Reserve Tank, until full. Replace the cap.

11. Once all the above steps are completed, check the glycol concentration in the system to ensure it is at the correct concentration. If not, correct the concentration accordingly.

12. Replace all panels.

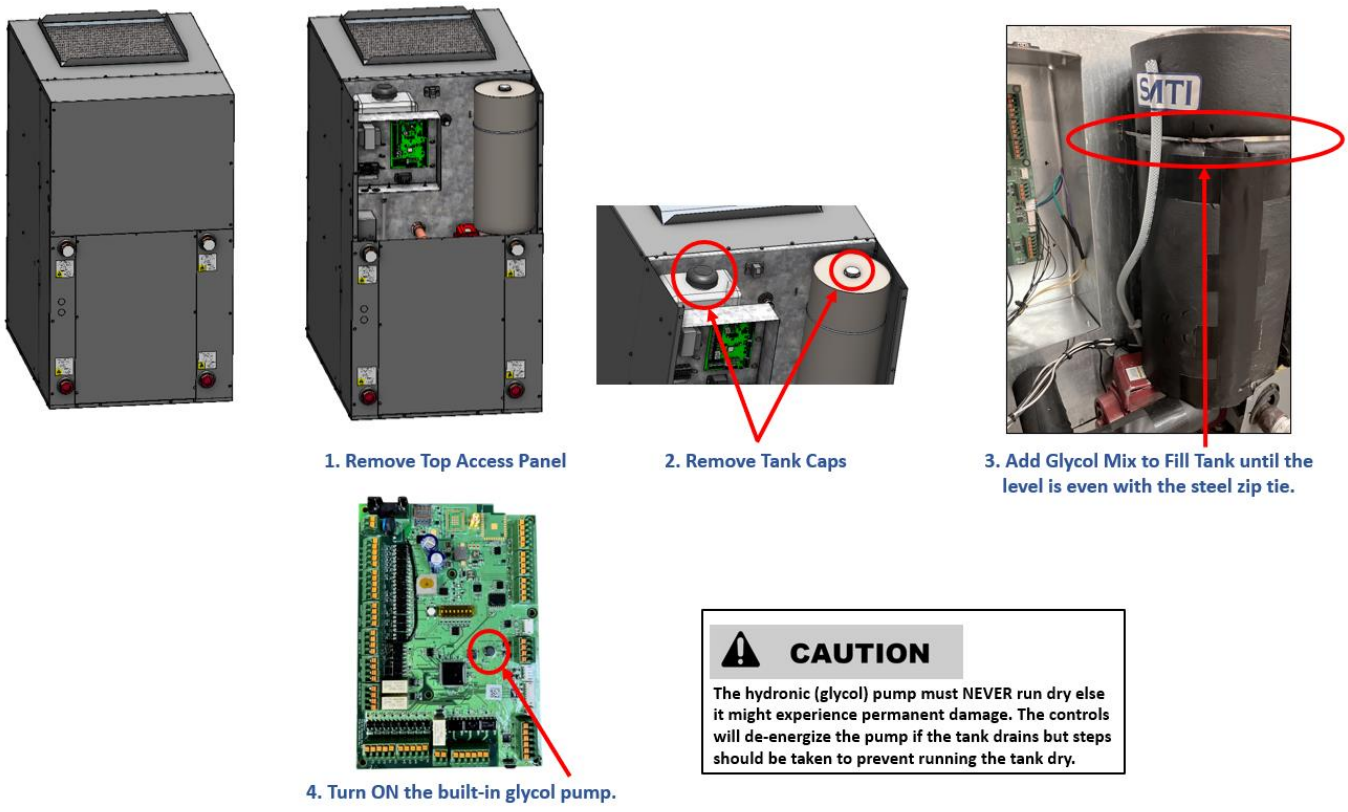

Figure 14: Purge/Fill Hydronic System Steps

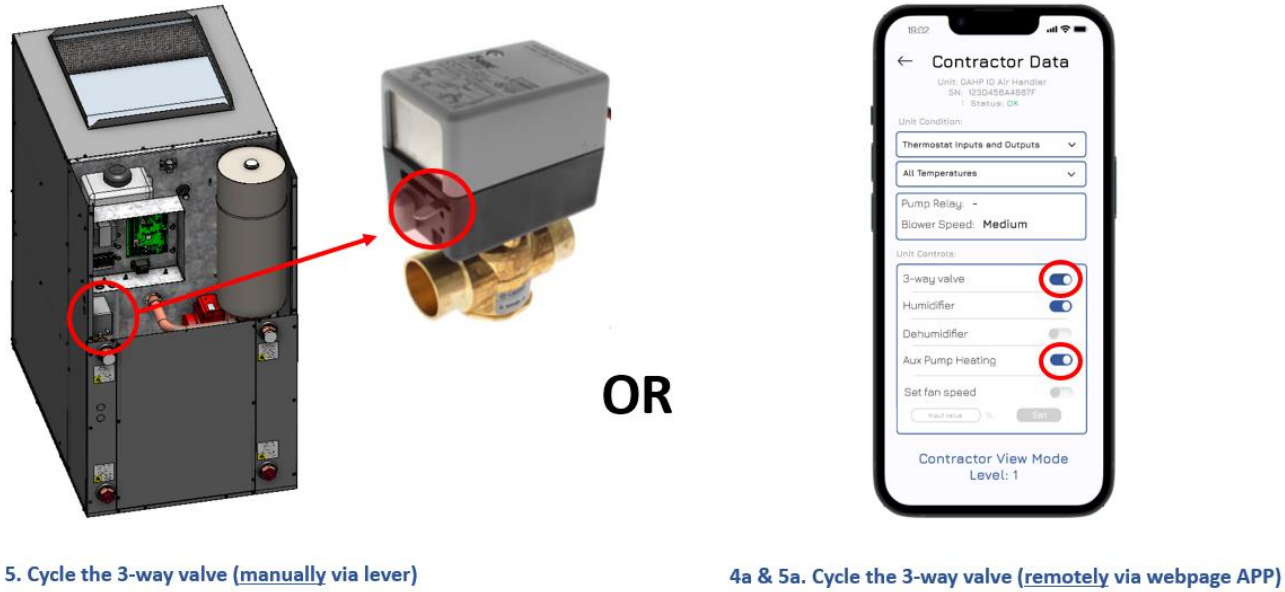

Figure 15: Purge/Fill Hydronic System Steps Continued



Figure 16: Purge/Fill Hydronic System Steps Continued

2.9 Hydronic Flow Rate Adjustment

2.9.1 Flow verification

After plumbing, wiring, and glycol filling has been completed between the AHU, heating appliance, and IST/ST/PHX (if applicable), the flow rate must be verified. The flow rate will vary based on the temperature of the hydronic fluid. In order to prevent potential faults from lower flow rates at cold hydronic temperatures, the rate should be dialed in while the system is operational, and the fluid is warm (at least 10 minutes after initiation of a heating cycle). The flow should then be monitored as the system shuts down and the fluid cools to confirm the rate is still within the appropriate range.

If connected to an ANESI GAHP the flow rate may be seen by either connecting directly with a laptop or windows-based tablet to the board's micro-USB port and logging into its user interface OR remotely via the webpage-based app. If connected to a different heat source, follow its instructions.

If connected to a GAHP the range of flow should be 7 to 10 GPM (27 to 38 LPM). If flow is outside of this range, follow the steps outlined below:

2.9.1.1 Too much flow (Greater than 8.5 GPM [32 LPM])

If the flow is above the limit of 10 GPM (38 LPM), the following steps are required. If the flow is between the target 8.5 GPM (32 LPM) and the max limit of 10 GPM (38 LPM), the following steps are recommended to ensure the best performance from the appliance.

- For best results a flow control valve such as a globe valve should be installed. Another option is a Caleffi QuickSetter that incorporates a balancing valve and a flow meter into one.
- Alternatively, a ball valve could be used. Recommended locations would be the inlet/outlets to the AHU.
    - **Note:** If installed with an ANESI GAHP, there are valves located at the supply & return that may be utilized.
- Close the valve enough to throttle the flow in the system as close to the targeted 8.5 GPM (32 LPM) as possible.

2.9.1.2 Too little flow (Below 7 GPM [27 LPM]):

If the flow is below the limit of 7 GPM (27 LPM), the following steps are required. If the flow is between the target 8.5 GPM (32 LPM) and the min limit of 7 GPM (27 LPM), the following steps are recommended to ensure the best performance from the appliance, but not required.

- Ensure all ball valves are completely open.
    - Reminder: If installed with ANESI's GAHP, there are 2 isolation valves located at the supply & return ports.
- If the flow is still below the acceptable limit:
    - Check the calculations completed from section 2.3 and adjust them as needed to ensure they are correct.
    - Then:

- See if any fittings or excessive length of lines can be removed to decrease the excess pressure drop to bring the flow above the minimum range (or closer to the target)
- If feasible, increasing the piping diameter will result in a decreased pressure drop to bring the flow above the minimum range (or closer to the target)
- Otherwise, a booster pump is required. Refer to Section 2.3.6 for steps on installing a booster pump.

- Once the steps above have been decided:
  - Attempt to isolate as many sections of the system as possible to retain the glycol-solution in the lines.
  - Then (as applicable):
    - Remove and replace the applicable fittings and lines.
    - Install the selected booster pump (if needed) following all rules detailed in Section 2.3.6.
    - Follow Section 2.8 for refilling the system and confirm the flow is now within acceptable limits.

2.10 Blower Speed Adjustment

Using the ANESI app as shown in Appendix E to manually control the blower, measure the external static pressure or air flow at low, medium, and high speeds. See Section 1.6 for the blower speed tables. Use the app to adjust the blower speeds to result in the ANESI recommended flow rates of 500 CFM (235 L/s) for low, 900 CFM (425 L/s) for medium, and 1400 CFM (660 L/s) for high speed. Check all the vents in the building at each speed to ensure adequate air flow is being delivered. Adjust the speed settings as necessary to compensate for each site's ductwork.

2.11 Installation & Regular Inspection

Refer to Appendix D for a checklist of all requirements outlined above when installing an ANESI AHU as well as a checklist of items that should be covered with the end-user prior to completion.

3 Operation

The air handling unit will operate automatically based on inputs from the space heating thermostat and water heater aquastat to maintain thermal comfort and system efficiency. This custom logic is designed to prevent short cycles of the heat pump which is detrimental to the efficiency of any heating/cooling appliance. Therefore, **it is normal** to see continued runtime of both the AHU and the heating/cooling appliance after the thermostat setpoint has been met.

3.1 Heating / Cooling Modes

3.1.1 Space Heating

- Initiated after receiving a call for space heat via W1 or W2 (Stage 1 or Stage 2) from the indoor thermostat.

- The blower will begin at a low speed and will increase to medium then high speed until the thermostat is satisfied. If the thermostat sends a Stage 2 heating call (W2) the blower will move to the highest speed setting.

3.1.2 Water Heating

- Initiated after receiving a call for water heat from the indirect storage tank aquastat.

  It is recommended to set the tank aquastat between 120°F - 125°F (49°C - 52°C) for optimum GAHP performance.

⚠ DANGER

Water temperature over 125 °F (52 °C) can cause severe burns instantly resulting in severe injury or death. Children, the elderly, and the physically or mentally disabled are at highest risk for scald injury. Feel the water before bathing or showering.

The Aquastat on the tank may be set to the homeowners desired setpoint as long as the temperature setting <u>does not surpass 140 °F (60 °C)</u> when connected to an ANESI heat pump.

The high side pressure in a gas-absorption heat pump is proportional to the returning hydronic temperature. Therefore, the tank temperature for domestic hot water (DHW) cannot exceed 140 °F (60 °C) or else the heat pump is at risk of never meeting the setpoint as it cycles to try and prevent an over-pressure event.

The AHU will turn on the heat source and divert glycol flow via the integrated 3-way valve to the DHW tank. The heat source will run until the aquastat is satisfied.

- NOTE: The ANESI GAHP's default parameters are set to operate at a maximum firing rate of 50% during a dedicated water heating cycle. This is to prevent short cycling.

3.1.3 Combi Heating (Space Heating + Water Heating)

- If both space and water heating are being sent the controls will enter this mode with a priority to water heating.

- The AHU will switch between space and water heating based on both time and the lower tank temperature.
  - If the thermostat advances to Stage 2 (W2), priority is given to space heating.
  - If the lower tank temperature drops below 90 °F (32 °C), priority is given to water heating.
  - Otherwise, the AHU alternates based on timers until one of the demands is met.

3.1.4 "Overshoot" Mode (Space Heating)

- The longer the ANESI GAHP runs the less impact the initial startup losses have on the overall cycle efficiency. This mode allows the GAHP to continue operation after the thermostat has been satisfied and continues providing heat to the building at a reduced rate. The AHU blower runs at a low speed during this mode and thus the indoor air temp generally levels off instead of continuing to rise and overheat the house.

- Following a space heating cycle, the blower is reduced to low speed and a 20-minute timer is started. Upon completion of said timer the control will check the low tank temp to determine whether it should enter "WH Top Off" sub-mode or "AHU Decay" sub-mode.

3.1.5 "AHU Decay" Mode

- The controls will enter this mode to remove the heat stored in the hydronic system after shutting down the heat source. Since no gas is being used during this mode it is a way to provide "free" energy to the building while returning the heat source to an idle position ready for the next startup.

- It will remain in this mode until the hydronic supply temperature is less than 95 °F (35 °C) or a maximum of 10 minutes.

3.1.6 "Water Heat Top-Off" Mode

- Following a space heating cycle, the control will monitor the indirect storage tank temperature (lower tank). If it is below 110 °F (43 °C), the control will switch to water heating mode and heat the tank back to the same temperature as the previous water heat cycle. This is another mode that extends the GAHP on time and can help prevent an impending dedicated water heating cycle.

3.1.7 "Setback Recovery" Mode

- The controls transition to this mode if the call for space heat has been in Stage 2 for longer than 45 minutes and will request a higher supply water temperature from the heat source to improve the speed of recovery.

3.1.8 Space Cooling

- Initiated after receiving a signal for space cooling (Y1 or Y2) from the thermostat.

- The AHU will forward the signal to the add-on air conditioning system.

- The blower will start out at a medium speed and will increase to high speed after a period of time if the thermostat is not satisfied. If the thermostat sends a Stage 2 cooling signal it will go directly to high speed.

- After the signal for cooling is removed, the blower will reduce to medium speed and remove the signal to the air conditioning system. After a delay, the blower will turn off.

3.1.9 Electric Heat Pump Space Heating

- Initiated after receiving a signal for space heating (Y1+O or Y2+O) from the thermostat.

- The AHU will relay the signal to the add-on electric heat pump system.

- Blower will start out at a medium speed and will increase to high speed after a time period if the thermostat is not satisfied. If the thermostat sends a Stage 2 heating signal it will go directly to high speed.

- After the signal for heating is removed, the blower will reduce to medium speed and remove the signal to the electric heat pump system. After a delay, the blower will turn off.

3.1.10 Combi Hybrid (Electric Space Cooling or Heating + Water Heating)

- The "Space Cooling" or "Electric Heat Pump Space Heating" & "Water Heating" modes mentioned above function simultaneously since space cooling or heating is being provided by a separate piece of equipment and only using the airflow from the AHU blower.

3.1.11 Fan Only

- When the G signal is received from the indoor thermostat the air handling unit will turn on the blower and operate at the designated speed set by the Contractor during commissioning, default speed is 50%.

- The speed may be set by logging into the ANESI App or directly connecting to the Micro-B USB port on the control board, as shown in Appendix E.

- Default blower speed is set to 50%.

4 Monitoring & Safety

4.1 Sensors / Switches

Thermistors: Four thermistors are used to monitor the glycol and air temperatures entering and leaving the AHU. Any indirect storage tank sensors that are available can be connected to the designated terminals on the AHU control board including IST Top Temp, IST Mid Temp, and IST Low Temp.

Float Switch: A float switch is used to detect a low glycol level in the expansion tank. When a low level is detected by the switch opening, the controls will shut off the AHU and heating appliance. Once the tank's level is restored, the switch will reset itself.

GAHP Error: This input on the control board is used to receive a 24 VAC signal from the ANESI GAHP. In case of signal loss, the AHU Indoor board will initiate a Hard Lockout, which will reset automatically once the signal is restored.

DIP Switches: There are 8 DIP switches located at the center of the AHU control board, and each are identified with a number. To prevent damage, use a small screwdriver or equivalent to change switch position.

Dip Switch Configuration

Switch Position	ON	OFF
1	Backup Heating Equipment Installed = **NO**	Backup Heating Equipment Installed = **YES**
2	DHW Low Tank Sensor Installed = **NO**	DHW Low Tank Sensor Installed = **YES**
3	N/A	N/A
4	N/A	N/A
5	N/A	N/A
6	N/A	N/A
7	N/A	N/A
8	N/A	N/A

5 Maintenance

Routine maintenance will ensure the best performance and life of the AHU. An ANESI trained professional must perform all maintenance beyond changing the air filter.

5.1 Air Filter

The air filter should be changed regularly by the homeowner. During the annual maintenance, it is important to inspect the filter/filter housing.

5.2 Blower

If regular filter maintenance is adhered to, the blower fan and motor should not require extensive cleaning. However, it is recommended to check the fan for dust and particulate buildup once a year. If dirty, vacuum to remove dust and particulates. The blower can be removed from the cabinet for cleaning if required. Keeping the fan blades clean will maintain the capacity and efficiency of the AHU.

To remove the blower (for more detailed instructions see SERVICE MANUAL):

- Remove the lower front access panel.
- Remove the blower-access panel from the internal divider panel.
- Disconnect the power connector from the blower.
- Disconnect the blower PWM connector.
- Remove the two mounting screws from the blower flange.
- Carefully slide/pull the blower out of the AHU through the access panel opening.

To reinstall the blower (for more detailed instructions see SERVICE MANUAL):

- Carefully slide the blower back into the AHU through the access panel opening, taking care to secure the blower's flanges into the mounting tabs and lining up the mounting screw holes.
- Reinstall the two mounting screws.
- Reconnect the blower PWM connection to the blower.
- Reconnect the power connection to the blower.
- Reinstall the blower-access panel.
- Reinstall the lower front access panel.

The blower should be run at minimum and maximum speeds to ensure the blower is operating smoothly. This may be accomplished remotely through the app or by connecting to the board and logging into the user interface.

5.3 Hydronic Coil

If regular filter maintenance is adhered to, the hydronic coil should not require extensive cleaning. However, it is recommended that the coil be inspected annually for particulate buildup and leaks. A clean coil will maintain the capacity and efficiency of the AHU.

Should cleaning be required, carefully (being sure not to damage the fins) vacuum the coil to remove the buildup. If the extent of buildup requires a liquid or spray to clean, the blower MUST be removed to ensure the electrical components are not damaged. Refer to the above section for steps to remove the blower. Confirm that the coil is dry before reinstalling the blower motor to ensure that the electrical components do not become wet.

It is also recommended that the coil be inspected for any leak points, both liquid and air. If any are present, address them accordingly.

5.4 Strainer

If the flow rate is found to be lower than what was recorded during installation, then the AHU's Y-strainer should be inspected and cleaned. Refer to the ANESI service manual for guidance.

It is recommended to install ball valves before & after the AHU to limit the amount of glycol that must be drained when the strainer is removed.

5.5 Checking Glycol Levels

Confirm that the Glycol Reserve Tank is full, and that the Fill/Purge Tank is filled to the bottom of the fill port.

Should the Glycol Reserve Tank or Fill/Purge Tank level be low, this means there is a potential leak within the system. Determine the location of the leak and repair before refilling each tank.

Taking a sample from the expansion tank, check the concentration of the glycol mixture and ensure it is still within the necessary range outlined in Section 2.8.1 above.

Test the pH of the mixture and adjust to the correct level if needed by adding the appropriate amount of “pH Up” or “pH Down” to the expansion tank fill port with the pump running, wait a few minutes for the loop to mix, check again, and adjust as necessary.

Ensure all caps are replaced and secure.

5.6 Hydronic Pump

The circulating pump should be run to check the flow rate. If it is lower than what was recorded during the installation, this could be an indication of a clogged Y-strainer. See the service manual for instructions on cleaning the Y-strainer and if necessary, replacing the pump.

5.7 Checking the Error Log

The AHU control board contains an error log that can be accessed by utilizing the WHITE push button or the App. It is important to check the log annually to ensure that the AHU is performing correctly. Refer to Section 6.3 “Push Button Logic” for steps to access and read the applicable error codes. If errors are present refer to Section 6.4 along with the ANESI service manual for further guidance.

6 Troubleshooting

6.1 Definitions

Information communicated from the control via the diagnostic LEDs can be generalized into the following categories:

Status: Indicates functional status, such as start, run, or shutdown

Warning: Indicates an abnormal condition which does not directly affect current operation and does not rise to the level of lockout, such as a glide out of tolerance

Soft Lockout: Indicates a condition which interrupted normal operation, but will automatically reset once the following are met:

The error condition has been removed and the lockout time has elapsed.
The lockout time has been manually overridden, via the push button.

Hard Lockout: Indicates a condition which interrupted normal operation, but will only reset by:

a. Cycling the power to the control
b. Clearing error via the on-board push button, the reset button is beside the dip switch block. **Resetting is accomplished by pressing the reset button once and release, then again once and release, and then press and hold for 9 seconds**. **(1,1,9)**

6.2 Diagnostic LEDs

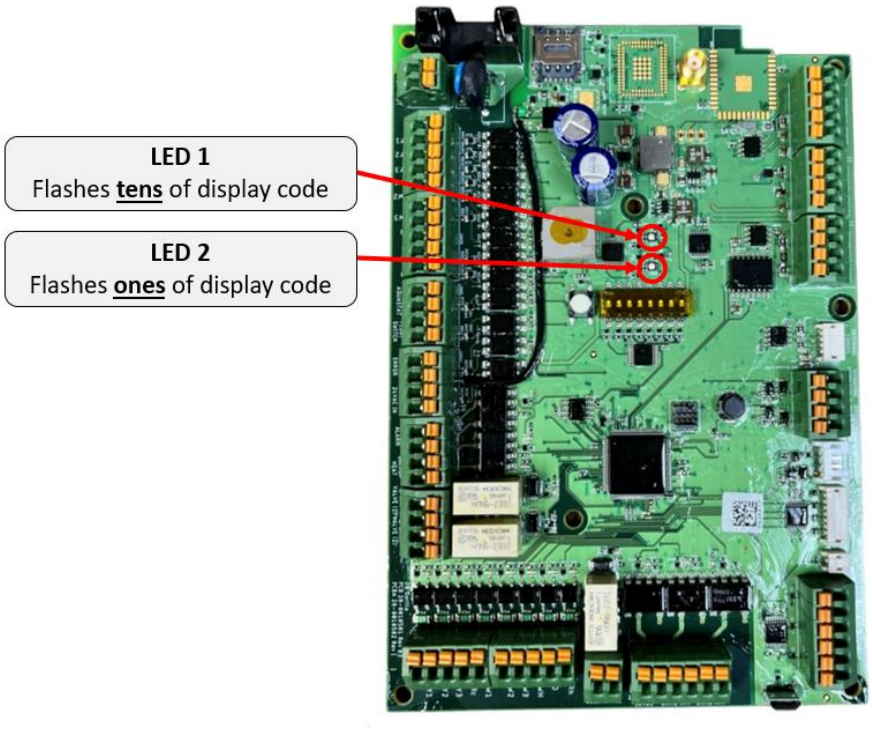

Figure 17: AHU Control Board LED Display

There are two tri-colored LEDs on the control – LED1 and LED2 as shown in Figure 17 below – each capable of flashing codes in green, amber or red. The function of each LED is as follows:

6.2.1 LED Colors

Both LEDs indicates the overall system status or lockout error:

a. Green – System normal
b. Amber – System normal, warning condition
c. Red – System in lockout

6.2.2 Flash Code Logic

a. The 2-digit flash code references both LED1 and LED2.
b. The first digit is the number of flashes for LED1.
c. The second digit is the number of flashes for LED2.
d. Example: Flash code 23 is indicated by flashing LED1 two times, followed by flashing LED2 three times.

6.3 Push Button Logic

There are 2 contact push buttons, White and Black.

6.3.1 The WHITE Push Button

This button is used for resetting errors and clearing timers. Reference section 6.1 for resetting the board errors.

Display AHU Control Board Error Log

- ***Press button once.***
- Errors displayed with a 2 second pause between entries.
- Displays errors with amber color.
- Once all entries have been displayed, both LEDs flash twice fast (red), then LEDs return to normal operation.

Clear Current Errors & Timers

1. ***Press – Release***
2. ***Press – Release***
3. ***Press – Hold for 5 seconds***
4. LEDs will flash pattern below once reset complete (@ normal flash rate):
   - LED1: amber LED2: off
   - LED1: off LED2: amber
   - Repeat 2 times (total 3 cycles)

6.3.2 The BLACK Push Button

This button is used to manually run the hydronic pump when filling/purging the system as outlined in Section 2.8.2.2.

Temporary Jog

1. ***Press – Hold***
2. The hydronic pump will turn ON and stay ON until the button is released.

Sustained Pump ON - Short

1. ***Tap the button 3 times within 3 seconds.***
2. The hydronic pump will turn ON and stay ON for **10 minutes**.

Sustained Pump ON - Long

1. ***Tap the button 6 times within 6 seconds.***
2. The hydronic pump will turn ON and stay ON for **30 minutes**.

CAUTION

The hydronic pump must NEVER run dry else it might experience permanent damage. The controls will de-energize the pump if the Fill/Purge Tank drains, but steps should be taken to prevent running the tank dry.

6.4 Troubleshooting Guidance

Symptoms	Resolutions
Space heating insufficient or no heat	• Check that the heat source and all AHU's components are functioning properly (no errors) and have power. • Check for any airflow obstruction. Filter or coil may be dirty. • Check for air in hydronic system – purge system & check flow rate. • Inlet and outlet hydronic connections to AHU are backwards – reverse connections. • Check all valves for restrictions or if they are left partially closed. Confirm 3-way valve works properly. • Confirm the thermostat is working properly, sending a call for heat, and that the control wires are connected properly. • If using a wireless thermostat, confirm the control module and thermostat are communicating.
Water heating insufficient or no heat	• Check that the heat source and all AHU's components are functioning properly (no errors) and have power. • Confirm 3-way valve works properly. • Check for air in hydronic system – purge system & check flow rate. • Inlet and outlet hydronic connections to AHU are backwards – reverse connections. • Inlet and outlet hydronic connections to the storage tank are backwards – reverse connections. • No flow or insufficient circulation pump flow. Confirm the pump operates properly. • Check all valves for restrictions or if they are left partially closed. • Confirm the aquastat is working properly, sending a call for heat, and that the control wires are connected properly.

Pump not running	• Confirm the control board has no errors and is calling for the pump to run. • Check if the pump is getting 115 VAC at the power terminal. • If the pump has power but is not spinning, there is an internal problem in the circulation pump – replace pump.
Blower not running	• Make sure the AHU control is calling for the blower to run when the hydronic supply temperature exceeds 90 °F. • Check for 115 VAC at the motor. • If the power is not present, check continuity of motor power cable individually. • Check continuity of motor control cable.
Short cycling (system starts/ stops frequently)	• Check if the heat pump and all AHU's components are functioning properly. • Make sure there are no errors present on the control board. • Check for any loose wires/connection between the thermostat and the AHU control board. • If using a wireless thermostat, make sure it maintains a constant communication to the control module.
Pump is noisy	• Air trapped in the system can cause the pump to make noise – purge air out of the system.
Fan is noisy	• Check for air leakage. Air leakage from the ductwork can cause whistling or hissing noise. Sealing the ductwork can help reduce the noise levels. • Confirm the air ducts are properly sized for the airflow.
Fan is running after thermostat is satisfied	○ The system is likely running in Overshoot or Air Handler Decay Modes. Check **Operation – Section 3** for more details.
Heat Pump & hydronic pump are running after thermostat is satisfied but fan is off	○ The system is likely running in Water Heat Top-off Mode. **Check Operation – Section 3** for more details.

7 Replacement Parts

Part	ANESI Part Numbers
Service Kit - Fuses	680018
Service Kit - Hydronic Vent - AHU	680019
Service Kit – Blower - AHU	680020
Service Kit – Hydronic Pump - AHU	680021
Service Kit – 3-way Valve - AHU	680022
Service Kit – Strainer - AHU	680023

For any parts not listed in the table above contact your local distributor.

Appendix

Appendix A **Control Box Layout, Fuse, & Relay Specifications**

Fuse Size: 3A, 250V, 5mm x 20mm, Cartridge Style

Relay: Coil 24VAC, Switch 277VAC Max, 20A

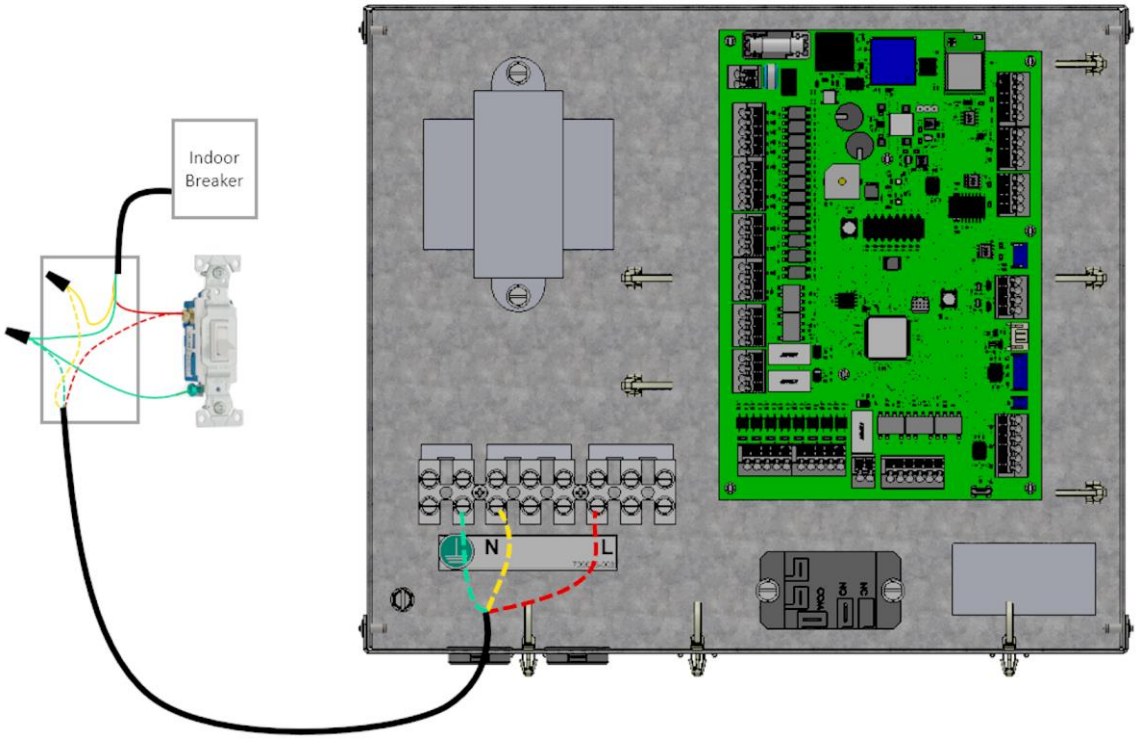

Figure A1: AHU Line Power

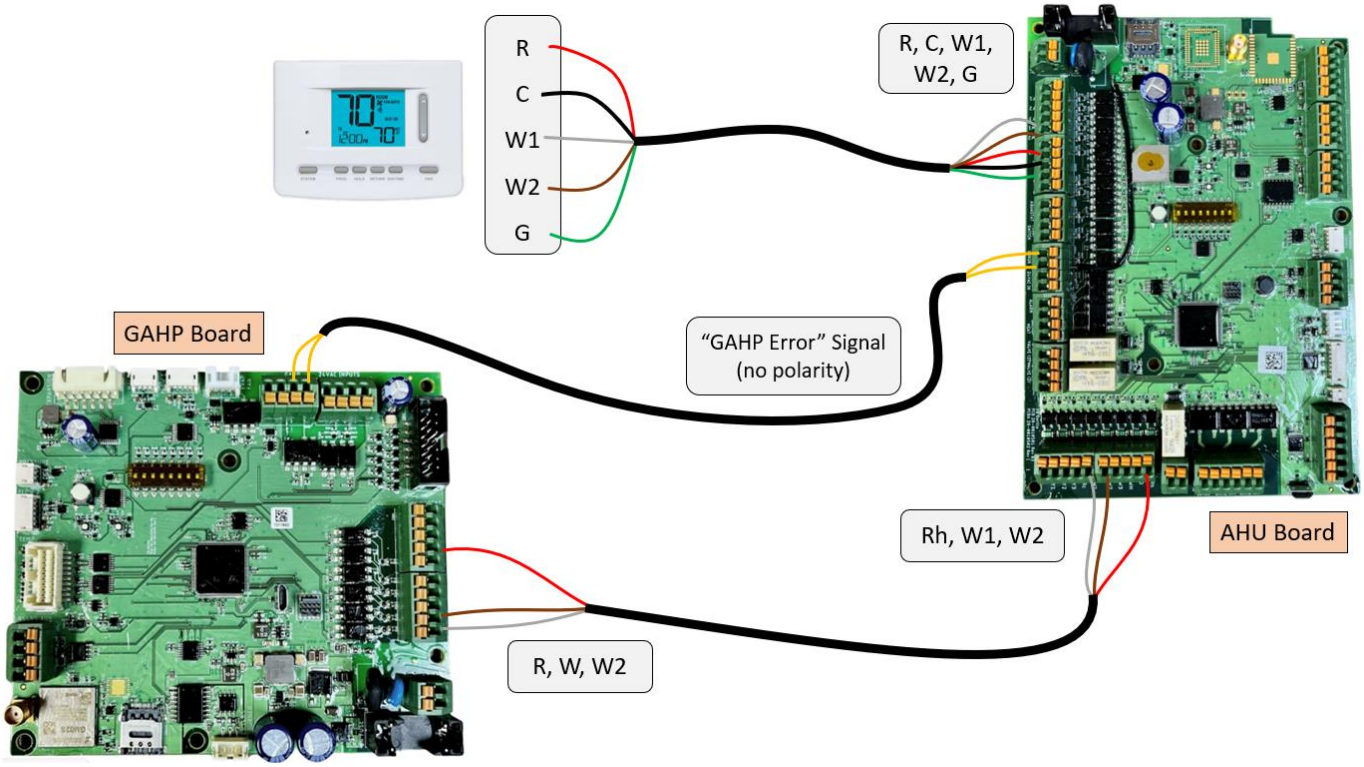

Figure A2: Residential Space Heating – Alternative Wiring (Thermostat Signals)

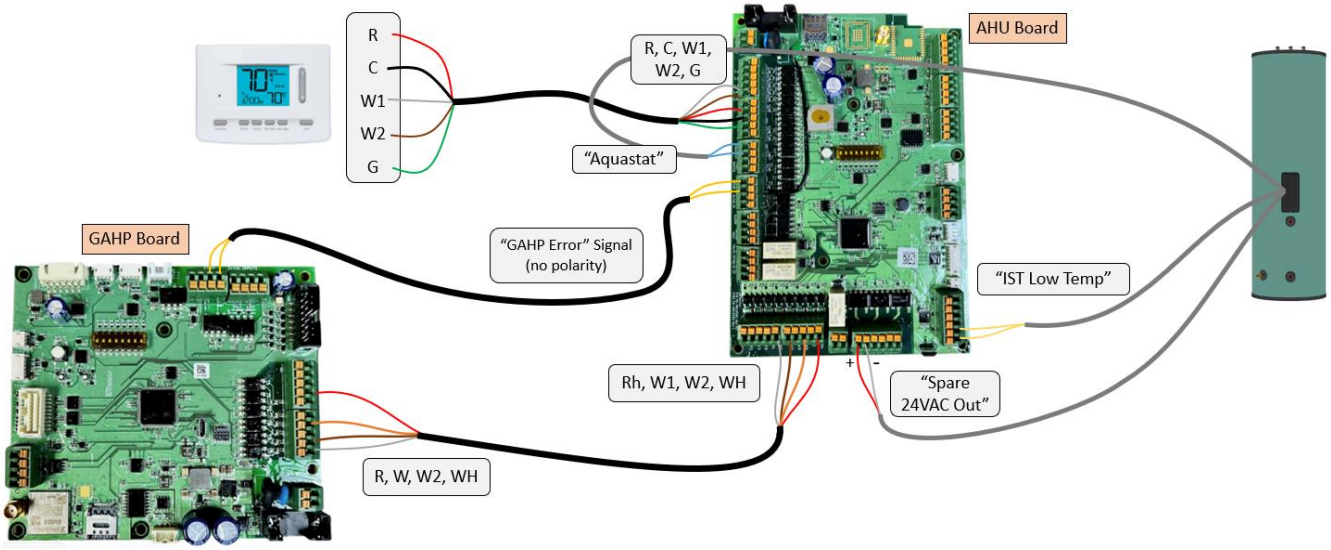

Figure A3: Residential - COMBI (space + water heating) Wiring with ANESI AHU

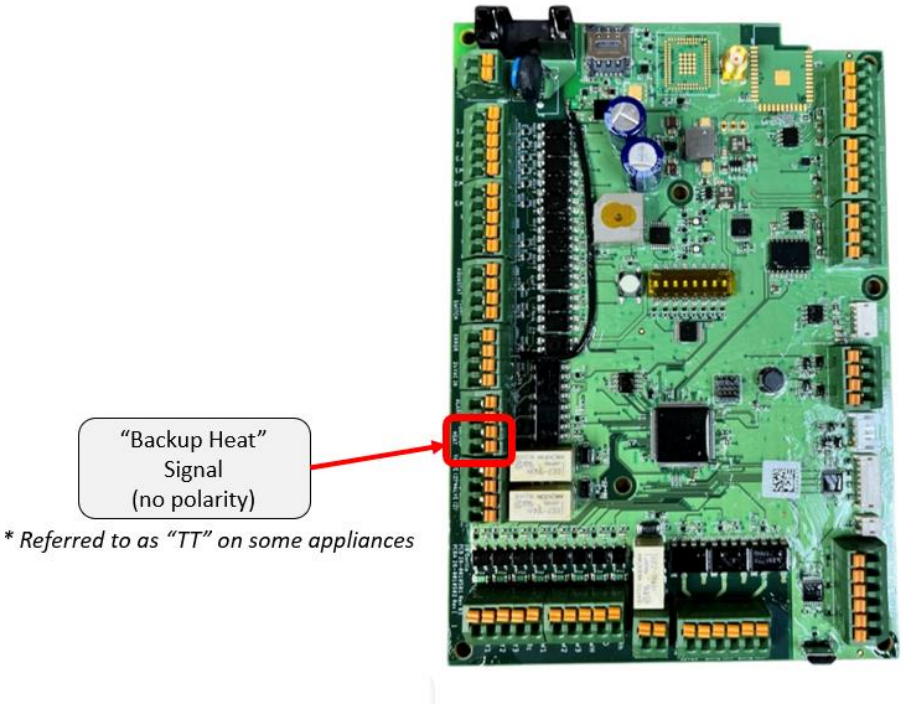

Figure A4: Backup Heat Signal

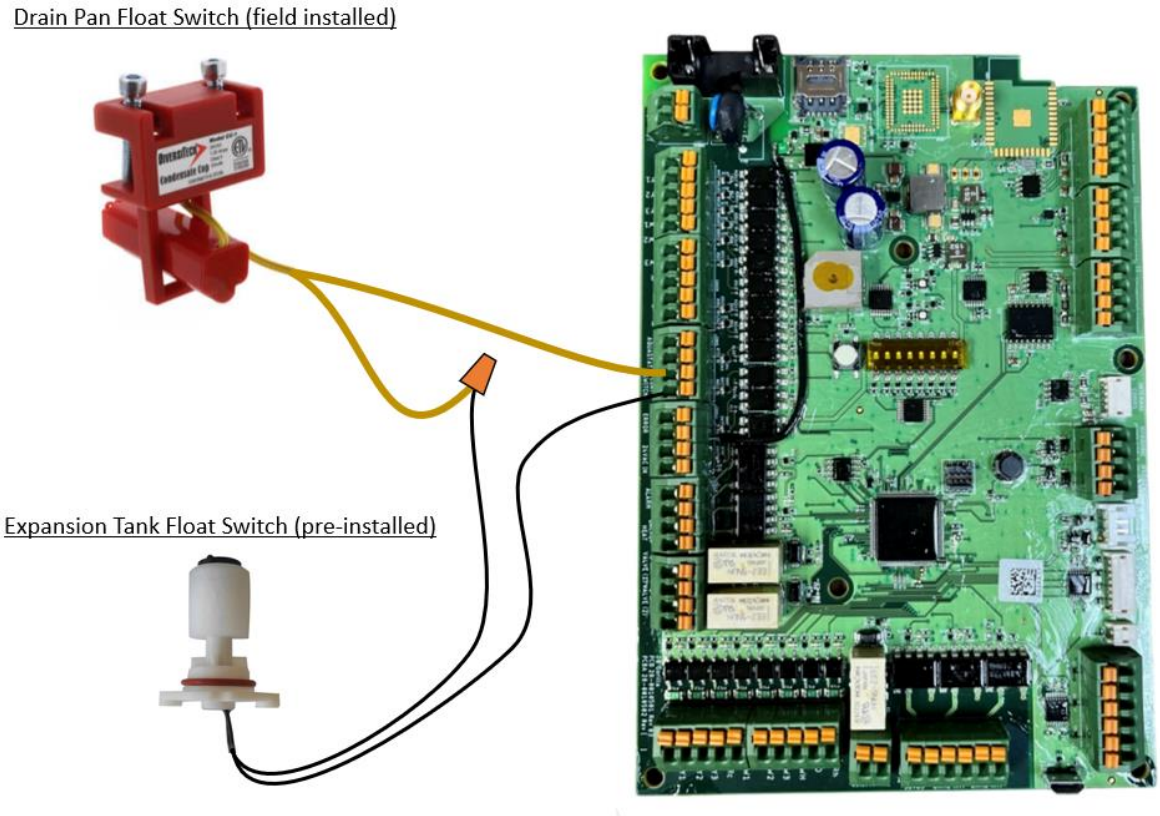

Figure A5: Drain Pan Float Switch Installation

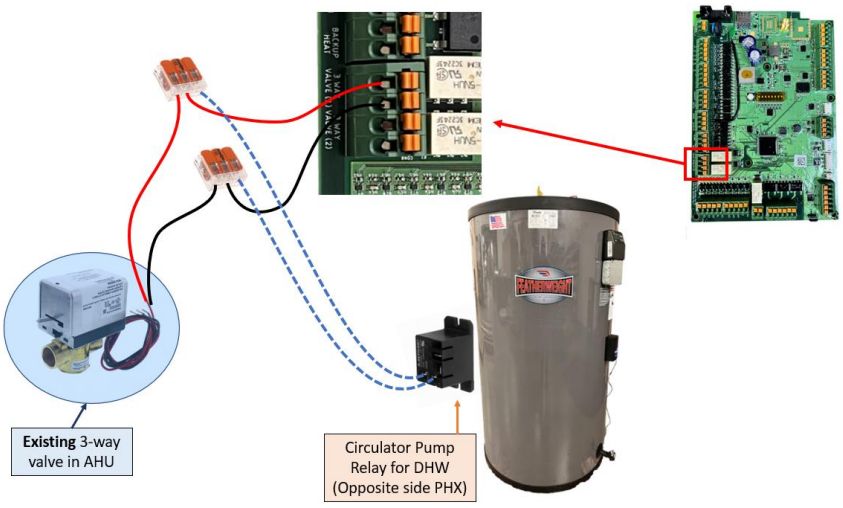

Figure A6: DHW Circulator Pump **Low**-Voltage Wiring (for Double-wall DHW Applications)

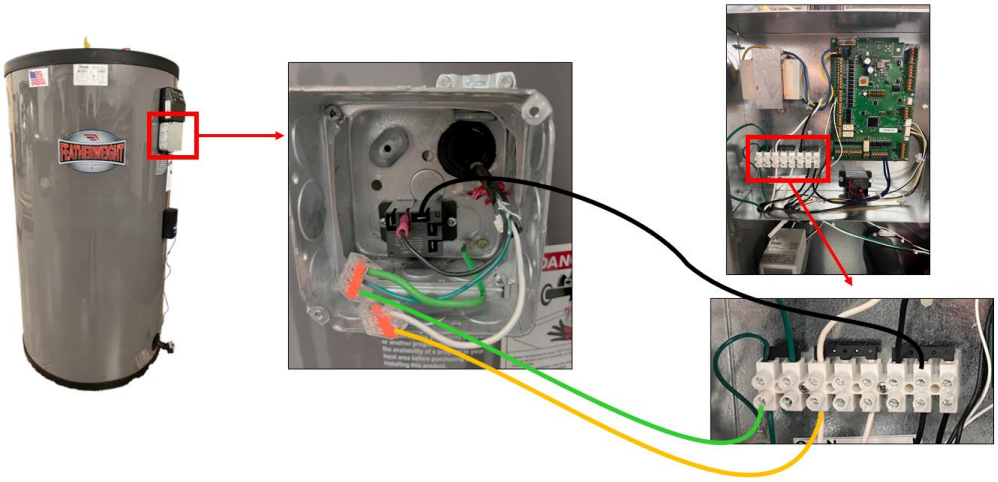

Figure A7: DHW Circulator Pump **High**-Voltage Wiring (for Double-wall DHW Applications)

Appendix B Electrical Diagram

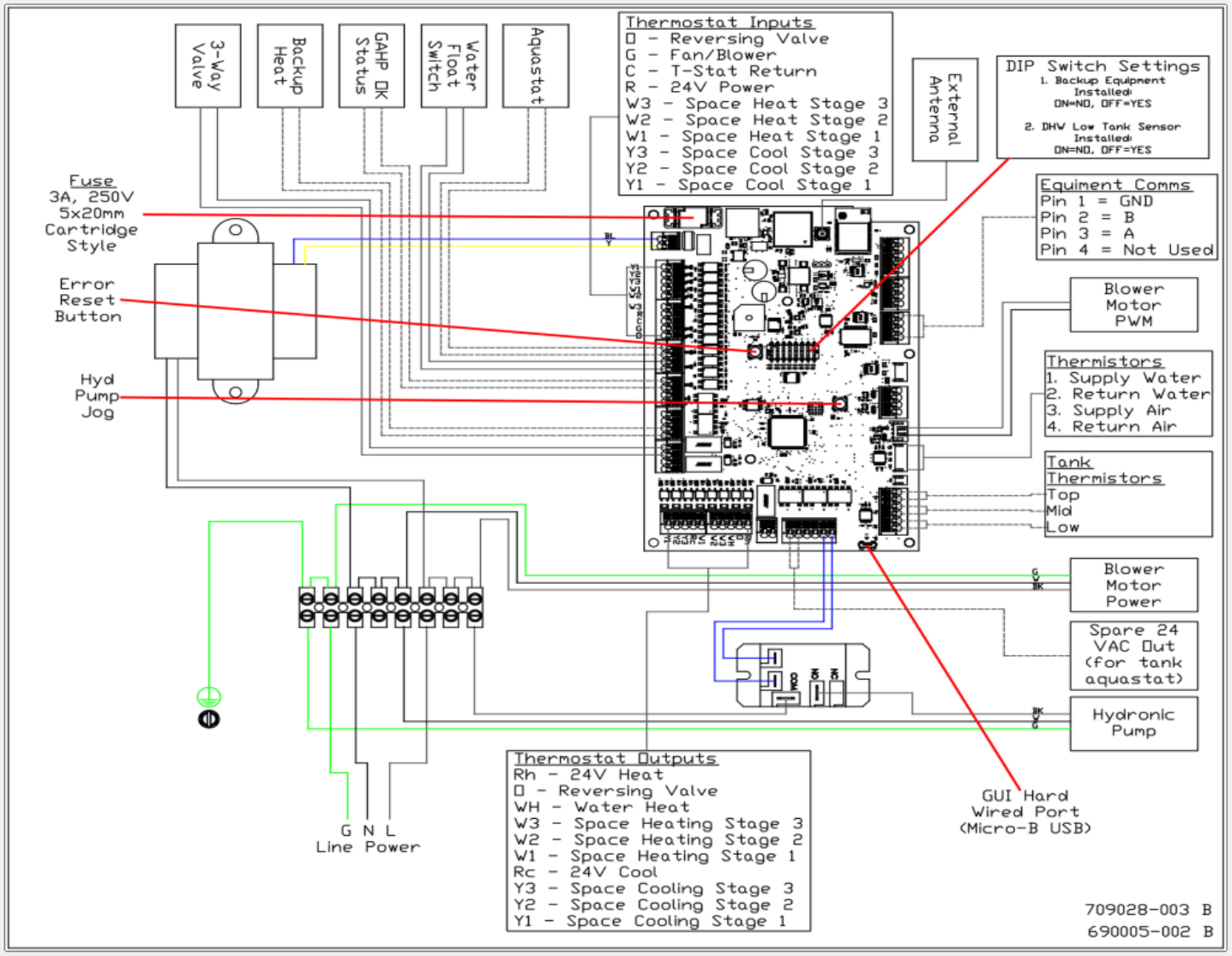

Appendix C Status & Fault Codes

Status Codes – Green

Flash Code	LED1	LED2	Code Type	Lockout Time	Description
11	Green	Green	Status	N/A	**Control is IDLE**
12	Green	Green	Status	N/A	**Startup**
13	Green	Green	Status	N/A	**Space Heat Run**
14	Green	Green	Status	N/A	**Water Heat Run**
15	Green	Green	Status	N/A	**Air Handler Decay Mode**
16	Green	Green	Status	N/A	**Water Heat Top-Off Mode**
17	Green	Green	Status	N/A	**Overshoot Mode**
18	Green	Green	Status	N/A	**Setback Recovery Mode**
19	Green	Green	Status	N/A	**COMBI (Space + Water Heat) Mode**

Warning Codes – Amber

Flash Code	LED1	LED2	Code Type	Lockout Time	Description
21	Amber	Amber	Warning	N/A	**Backup Heat Mode.** GAHP in error, BH mode active.
22	Amber	Amber	Warning	N/A	**Hydronic Return Temperature Sensor** Fault
23	Amber	Amber	Warning	N/A	**Hydronic Supply Temperature Sensor** Fault
24	Amber	Amber	Warning	N/A	**Supply Air Temperature Sensor** Fault
25	Amber	Amber	Warning	N/A	**Return Air Temperature Sensor** Fault
26	Amber	Amber	Warning	N/A	**IST Low Temperature Sensor** Fault
32	Amber	Amber	Warning	N/A	**Humidity Sensor** Fault
33	Amber	Amber	Warning	N/A	**GAHP Error** GAHP is in lockout
35	Amber	Amber	Warning	N/A	**Outdoor Unit Communication Lost** Modbus communication lost
36	Amber	Amber	Warning	N/A	**Remote Connectivity Lost**

Error Lockout Codes – Red

Flash Code	LED1	LED2	Code Type	Lockout Parameter	Description
11	Red	Red	Soft Lockout	20 Min or 90°F	Hydronic Supply Temperature too high during WH mode.
12	Red	Red	Soft Lockout	5 Min	Hydronic Supply Temperature has not reached minimum target
13	Red	Red	Hard Lockout	∞	Outdoor Appliance Fault
14	Red	Red	Hard Lockout	∞	Float Switch Open
15	Red	Red	Soft Lockout	5 Min	Backup Heating appliance hasn't reached minimum hydronic supply target

Appendix D Installation Checklists

Unit Details			Date:
Location Address			
GHP Model		GHP Serial #	
AHU Model		AHU Serial #	
IST Model		IST Serial #	
Contractor Company			
Contractor Name		Mobile #	

AHU			
Placement and Installation		***Hydronic Lines***	
☐	Access clearance requirements are met	☐	All hydronic lines connected and without leaks
☐	Visual confirmation of clean installation: nothing damaged	☐	All indoor hydronic lines are insulated with minimum R-4 insulation
☐	Duct work is sealed and without leaks	☐	Glycol level in plastic feeder tank AND expansion tank are FULL
☐	Filter is installed	☐	Check valve between plastic feeder tank and expansion tank installed and in correct orientation
☐	Photo collected for commissioning team	☐	Photo collected for commissioning team
		☐	All hydronic lines filled and purged, including lines to and from the IST when applicable
		☐	Inhibited Propylene Glycol Brand
		☐	Inhibited Propylene Glycol % Measured

	Electric Service		
☐	120VAC installed per local code and is hot	☐	Photos collected for commissioning team
☐	Control wiring is correctly installed in the control box^		
	☐ Thermostat Signals (R, C, W1, W2, G, Y1, Y2)	☐ Aquastat Signal	☐ Modbus (3-wire, CAT5 cable) ☐ (Low) Tank Temperature

^ *If applicable*

	Running the System		***IST (if applicable)***
☐	Connect and confirm remote access software functionality	☐	Confirm water fill level
		☐	Valves: hot water is closed AND cold-water inlet valve is open
		☐	Expansion tank connected
		☐	Disconnect control wire from IST water heater Aquastat
	Entire system		
☐	Set space-heating thermostat to initiate a space-heating call (Stage 1)	☐	Confirm blower initiation in AHU at hydronic supply temperature of 90°F (32.2 °C)
☐	Confirm burner lights in GAHP	☐	Confirm no leaks within the flue transition of the GAHP while unit is in operation

Appendix E ANESI Webpage-based APP Guidance

The ANESI App is webpage based and may be accessed by either scanning the QR code on the serial plate attached to the side of the unit or from a link on the ANESI website.

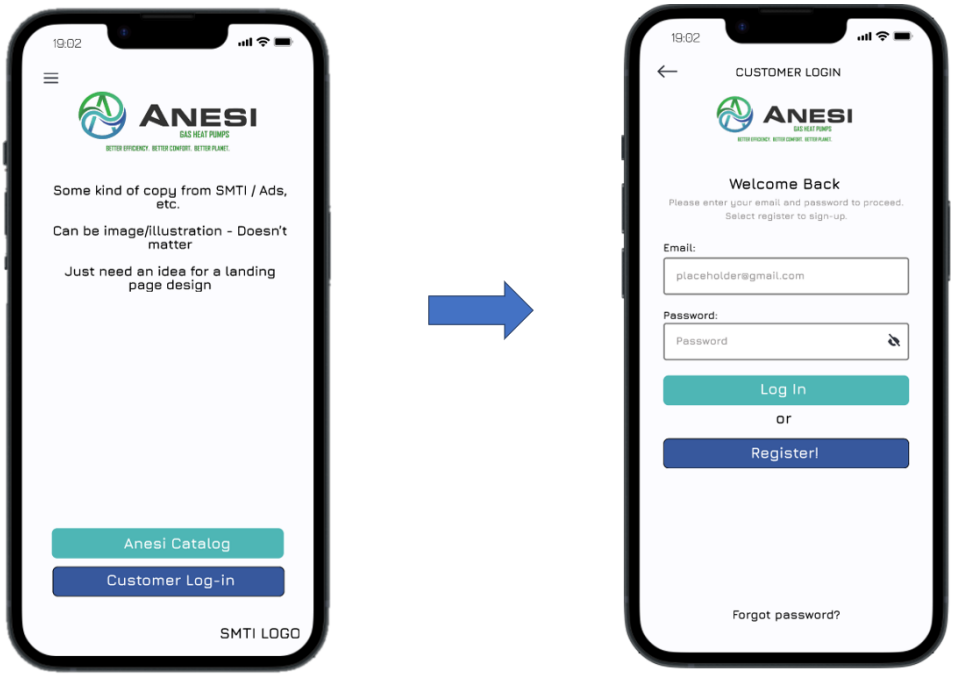

Figure E1: Landing Page & Login

Once an account is created and the user is logged in, the contractor may add (commission) a new unit by selecting the "+" icon in the upper right corner of their "Installed Units" screen. The app will guide the contractor through a commissioning checklist after either scanning the QR code or manually entering the serial number.

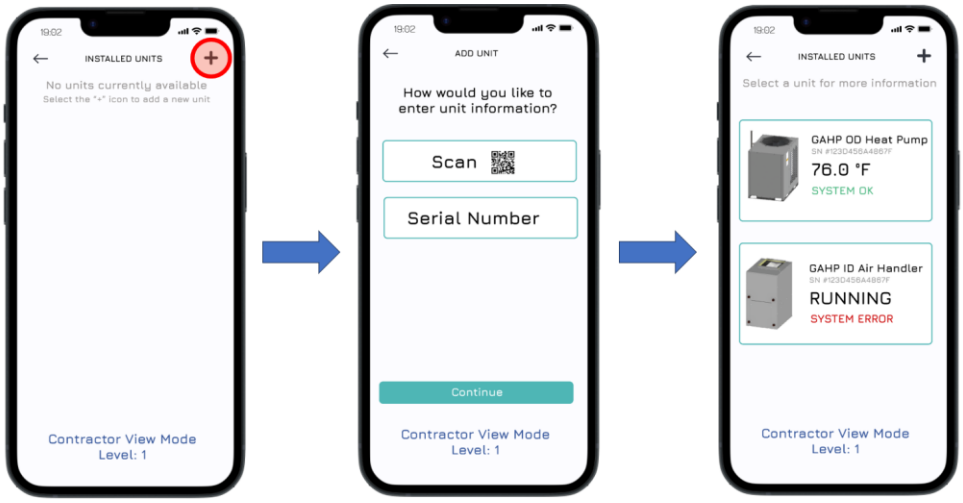

Figure E2: Adding a Unit

To monitor unit temperatures, the current mode of operation, thermostat inputs, manually control any of the internal components and adjust the blower speed select the unit from the "Installed Units" page.

Once selected the initial screen will display the unit's current condition along with the ability to monitor various system temperatures. If the user would like to see trends in the temperatures the "plot" icon may be selected to monitor the temperature fluctuations.

Selecting “More Data” at the bottom of the screen will change the display to show and allow the following:

- Status of the various thermostat input and outputs.
- Ability to manually control various components, thermostat calls, and blower speeds.
- Ability to set the blower speeds based on the home’s ductwork.

In order to permanently set the blower speeds for Low, Medium, High, and the speed used when a “G” (fan only) thermostat call is received perform the following steps as shown in Figure E3 below.

The blower speeds may be adjusted ***within the following ranges***:

LOW = 10 – 30 %
MED = 30 – 60 %
HIGH = 60 – 100 %
G = 50 – 100 %

1. Select the relay in the “Set Fan Speed” section.
2. Input the desired value you would like to set the blower speed to.
    a. Once set the airflow should be measured at the furthest duct to confirm that enough flow is present to thoroughly heat the space based on the design loads.

    NOTE: At LOW blower speed the airflow might not be high enough to feel by hand at a register. The goal is to just barely “trickle” heat into the home to prevent short cycling of the heat pump. The blower will automatically increase speed to MEDIUM if the thermostat call has not been satisfied after a short period of time.

3. Select “Set” to send the typed in value to the controls.
4. Once the desired airflow rates for Low, Medium, High, & G call have been determined reselect the relay next to the “Set Fan Speed” title to exit this manual control mode.
5. Select the relay next to “Set Final Blower Speeds”.
6. Input the values determined from steps 1 – 4 into the boxes for each mode.
7. Select “Set” to permanently change the typed in value in the controls.
8. Reselect the relay next to “Set Final Blower Speeds” to exit this mode.

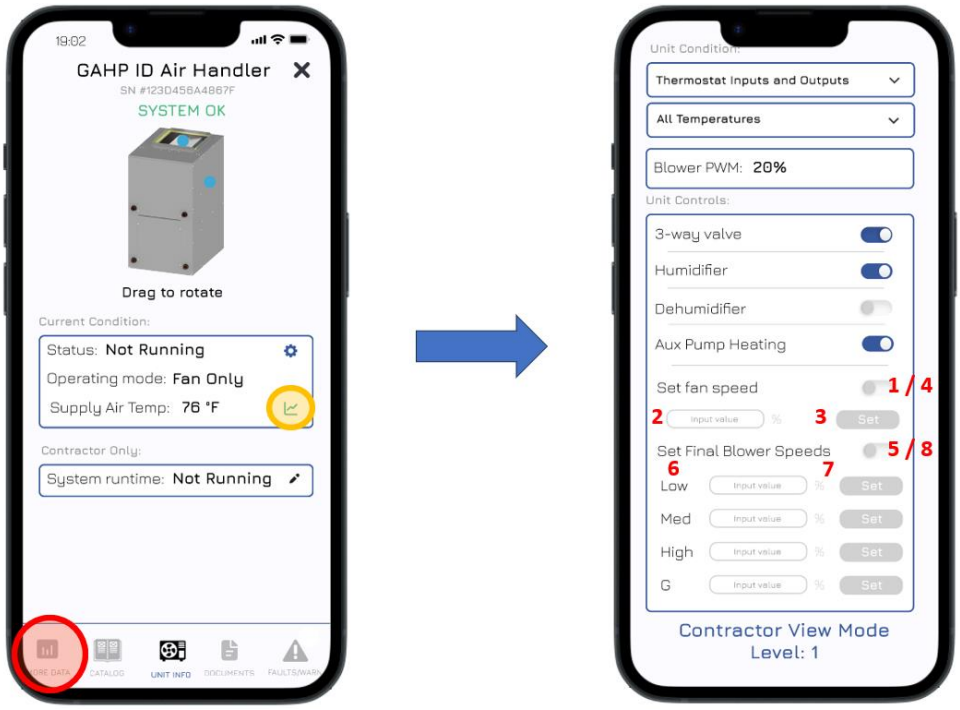

Figure E3: Monitoring & Manual Control

Appendix F Indoor Heat Exchanger Specifications

Indirect Storage Tank:

- Minimum Volume: 80 gallons (303 L)
- Dip Tube for domestic cold water in
- Minimum Heat Exchanger Surface Area: 20 sq. ft.
- NOTE: Entirety of coil should be located below mid tank.
- Aquastat Location: Middle of tank
- Thermistor Location: Low tank (lower 20% of total storage volume)
    - Recommended for COMBI operation.

Plate Heat Exchanger Sizing:

- Connections: minimum size 1" NPT (Male or Female) to match hydronic lines
- Load: 40,000 BTU/hr (11.7 kW)
- LMTD: target 6 °F (3 °C)
- Max Pressure Drop (either side): 2.0 psid (13.7 kPa)
- One Option: Alfa Laval: CB60-30H

Hot Side:

- Fluid: Propylene Glycol (40%, but varies based on location)
- Flow: 8.5 GPM (32 LPM)
- T_{in}: 140 °F (60 °C)

Cold Side:

- Fluid: Water
- Flow: Minimum 5 GPM (19 LPM)
- T_{in}: 120 °F (43 °C)

Storage Tank (If a PHX is used):

- Minimum Volume: 80 gallons (303 L)
- Dip Tube for domestic cold water in
- Return (cold) water back to PHX must come from bottom of tank.
- Supply (hot) water from PHX must empty into the middle of the tank.
    - A distribution tube of some kind should be used to prevent mixing.
- Aquastat Location: Middle of tank
- Thermistor Location: Low tank (lower 20% of total storage volume)
    - Recommended for COMBI operation.